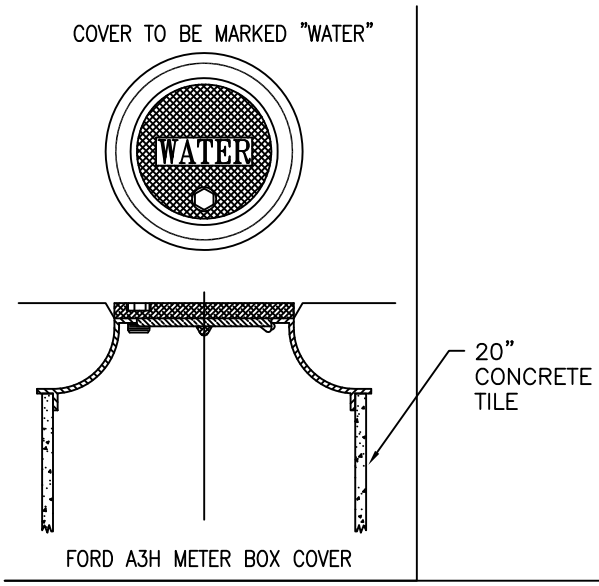

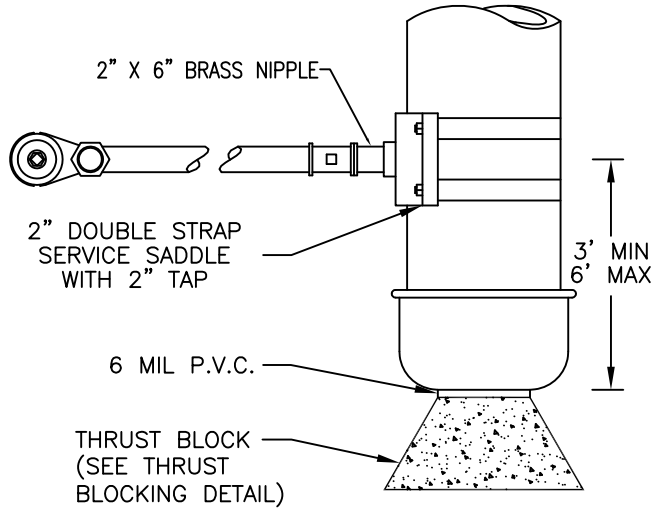

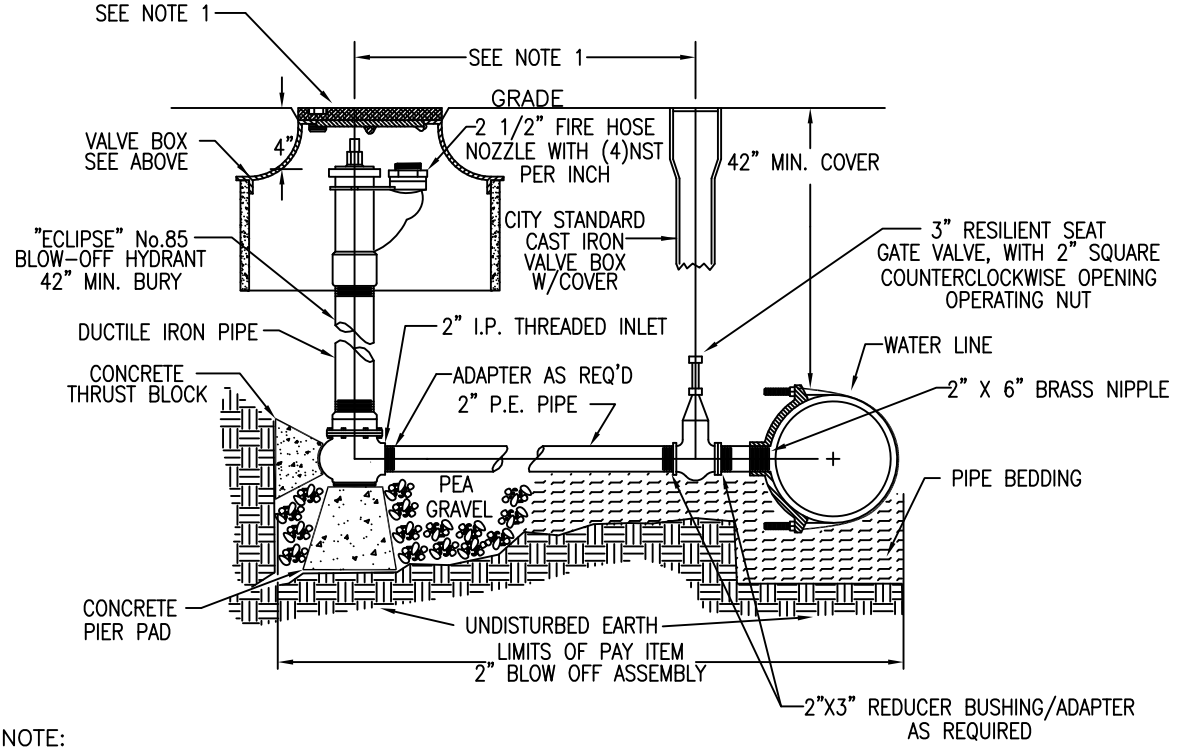

NOTE:

1) IN CUL-DE-SACS, LOCATE THE BLOWOFF ON A PROPERTY LINE, CENTERED AT 1 1/2 FEET BACK OF SIDEWALK. PROVIDE ADJUSTMENT, OR CONCRETE PAD AS REQUIRED BY STANDARD DRAWING 3-4. ON STANDARD STREETS, THE BLOW OFF IS TO BE LOCATED AT BACK OF EXISTING, OR FUTURE SIDEWALK. AT ALL INSTALLATIONS, WHEN A LANDSCAPE STRIP SEPARATES THE CURB AND WALK, LOCATE BLOWOFF 2 FEET FROM FACE OF CURB.

2) FOR WATER MAINS THAT WILL BE EXTENDED, SEE STD DWG 4-2

JULY 11, 2013

BENTON CITY

2" BLOW-OFF ASSEMBLY

DWG # 4-1

SHEET 1 OF 2

S:BCGEN/DETAILS/4-1-1 BLOW OFF.DWG

TEMPORARY 2" BLOW-OFF ASSEMBLY

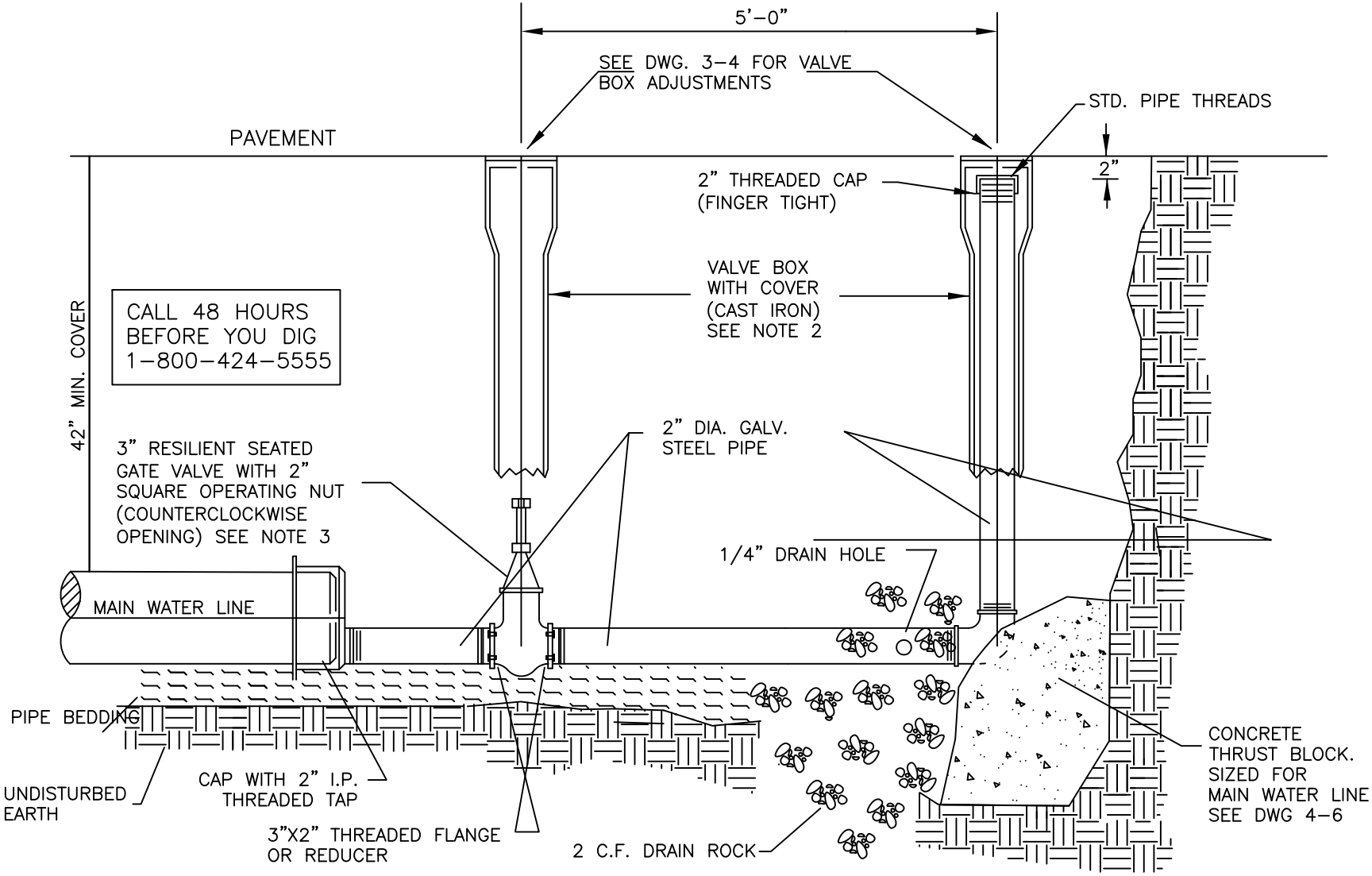

1) TO BE USED FOR INSTALLATIONS WHERE THE BLOW OFF WILL REMAIN IN PLACE FOR LESS THAN 10 DAYS AND AT THE ENDS OF LATERAL STUBS ONLY. FOR LATERALS, THE BLOW OFF MUST BE LOCATED OUT OF THE PAVEMENT. FOR MAINLINE BLOWOFFS THAT WILL BE IN PLACE FOR LONGER THAN 10 DAYS, SEE DWG 4-1, SHEET 1, OR 4-3.

2) ON LATERAL STUBS, THE VALVE BOX & COVER SHALL BE PER SECTION 4-8 OF THESE SPECIFICATIONS.

3) FOR LATERALS PROVIDE A CONCRETE THRUST BLOCK. ALL VALVES SHALL BE IN ACCORDANCE WITH CITY OF BENTON CITY STD. WATERMAIN SPECIFICATIONS.

JULY 11, 2013

DWG # 4-1

SHEET 2 OF 2

S:BCGEN/DETAILS/4-1-2 TEMP BLOW OFF.DWG

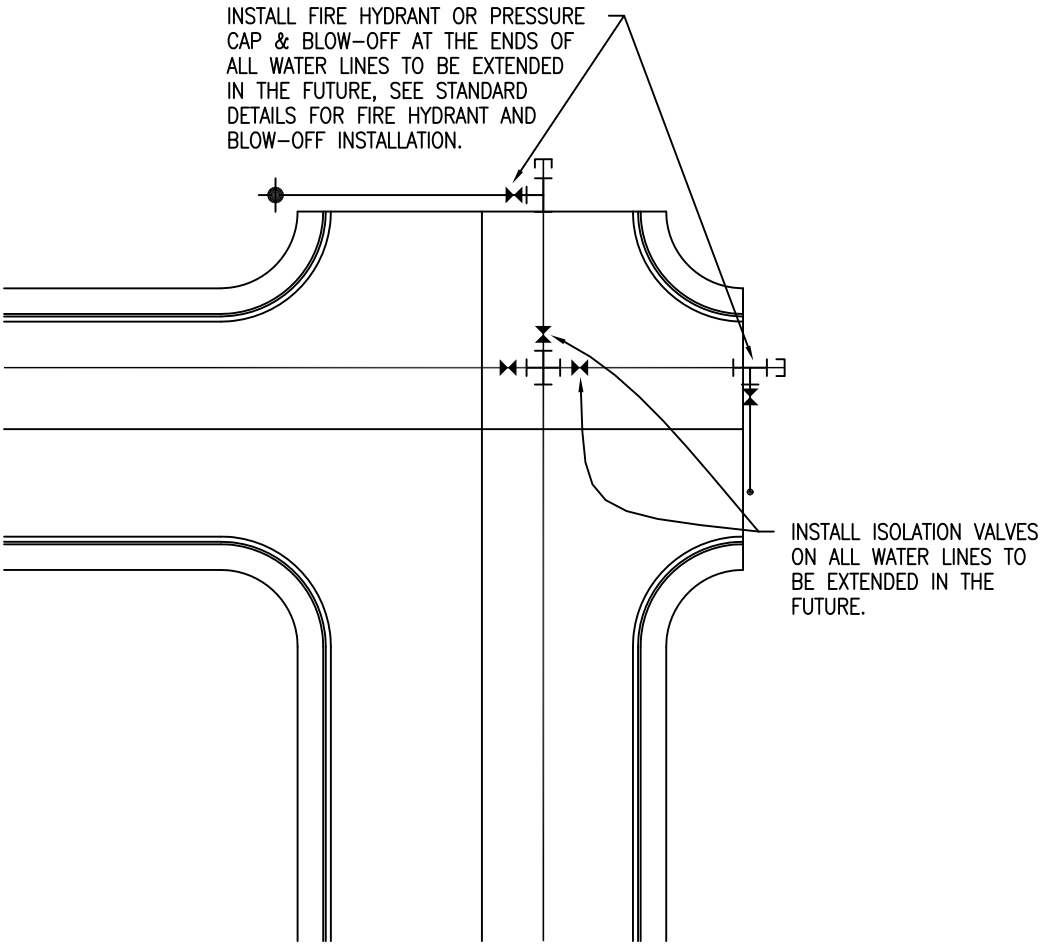

JULY 11, 2013

BENTON CITY

WATER STUB REQUIREMENTS

DWG #

4-2

S:BCGEN/DETAILS/4-2 WATER STUB.DWG

TRANSMISSION LINE BLOW OFF

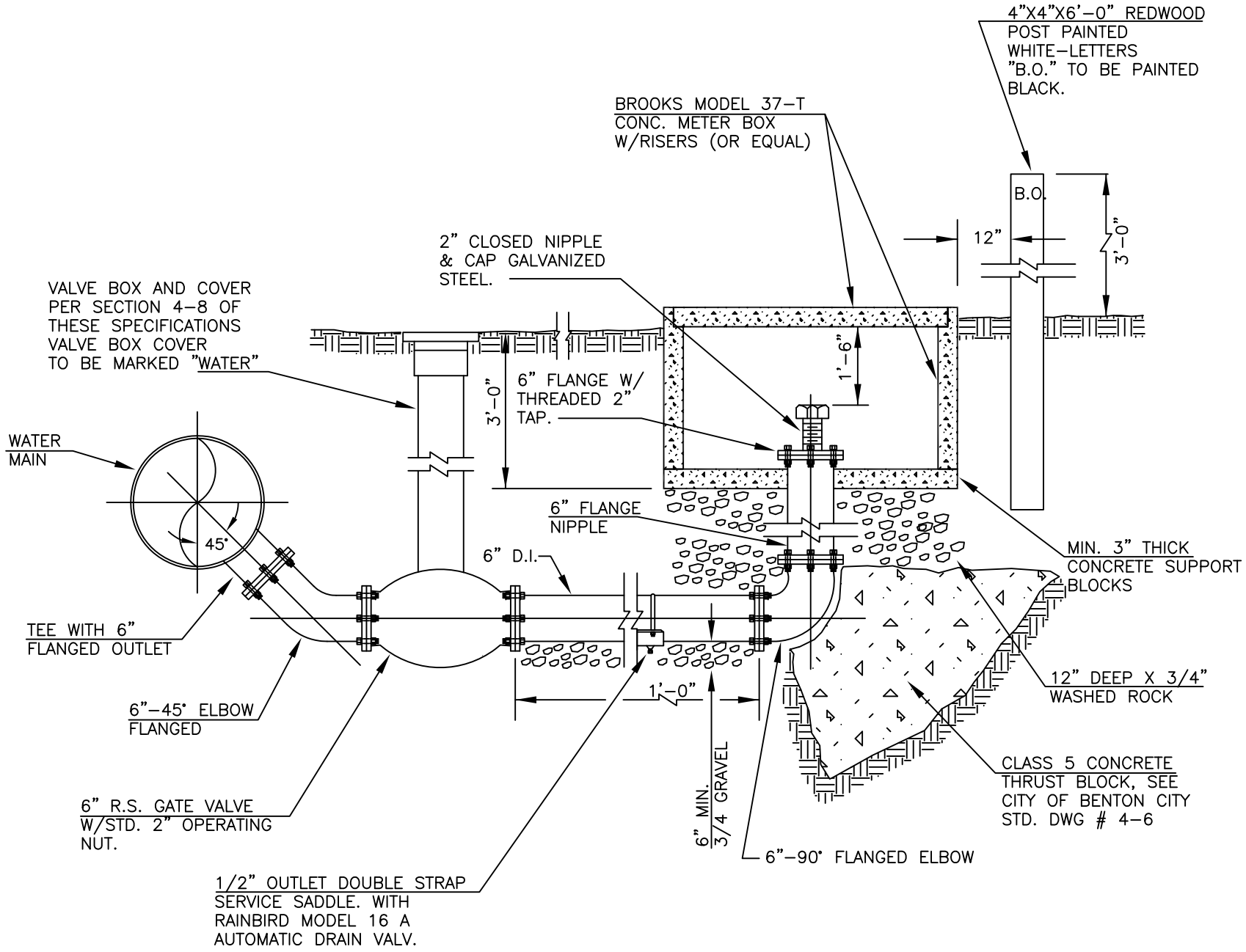

DWG # 4-3

JULY 11, 2013

S:BCGEN/DETAILS/4-3 TRANS BLOW OFF.DWG

NOTES:

1) HYDRANTS SHALL BE 3 PORT.
2) HYDRANTS SHALL BE PER SECTION 4–5 OF THE STANDARD SPECIFICATIONS.
3) 2 EA. 3/4" SHACKLE RODS MAY BE REQUIRED IN SPECIAL CIRCUMSTANCES, AS DIRECTED BY THE ENGINEER.
4) HUB & FLANGE CASTING. (SEE NOTE 2)
5) HYDRANTS SHALL BE HOODED UNTIL OPERATIONAL.
6) REMOVE CHAINS ON SIDE PORTS AND REMOVE CHAIN AND CAP ON MAIN PORT.
7) SEE DWG 1–3 FOR HYDRANT LOCATION W/LANDSCAPE STRIP.
8) SEE DWG 4–4 SHEET 2 FOR GUARD POST REQUIREMENTS SEE NOTE 6.
9) SEE DWG 4–6 SHEET 2 FOR OPTIONAL MECHANICAL RESTRAINT.
10) TRACER WIRE SHALL BE INSTALLED IN VALVE BOX PER STD. DRAWING 4–9. EXTEND TRACER WIRE TO HYDRANT FLANGE ABOVE GROUND

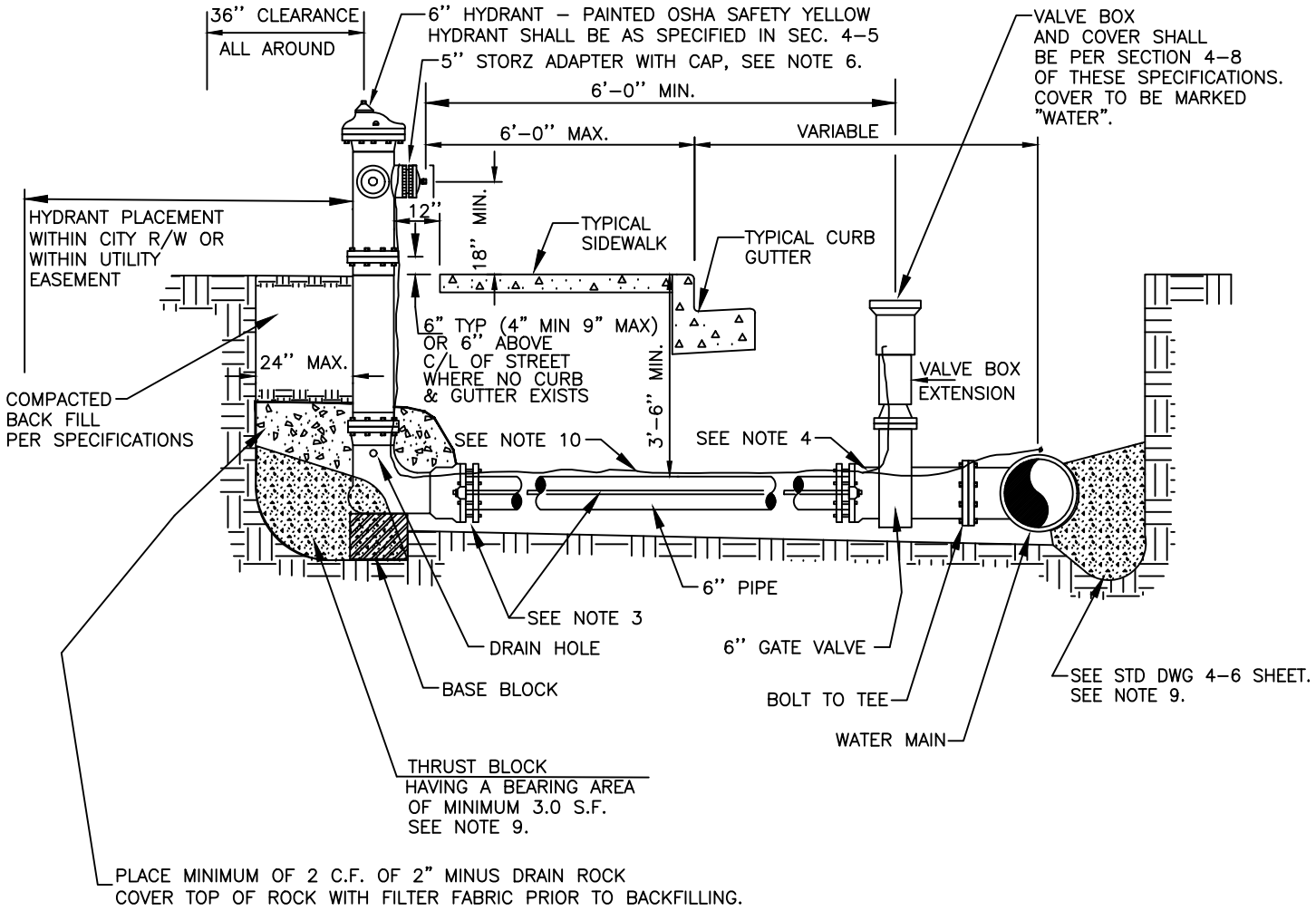

BENTON CITY

FIRE HYDRANT INSTALLATION

DWG # 4–4

SHEET 1 OF 2

MAY 5, 2015

S:\4–AutoCAD Drawings\BENTON CITY GENERAL\STD DETAILS\4–4–1 HYDRANT.dwg

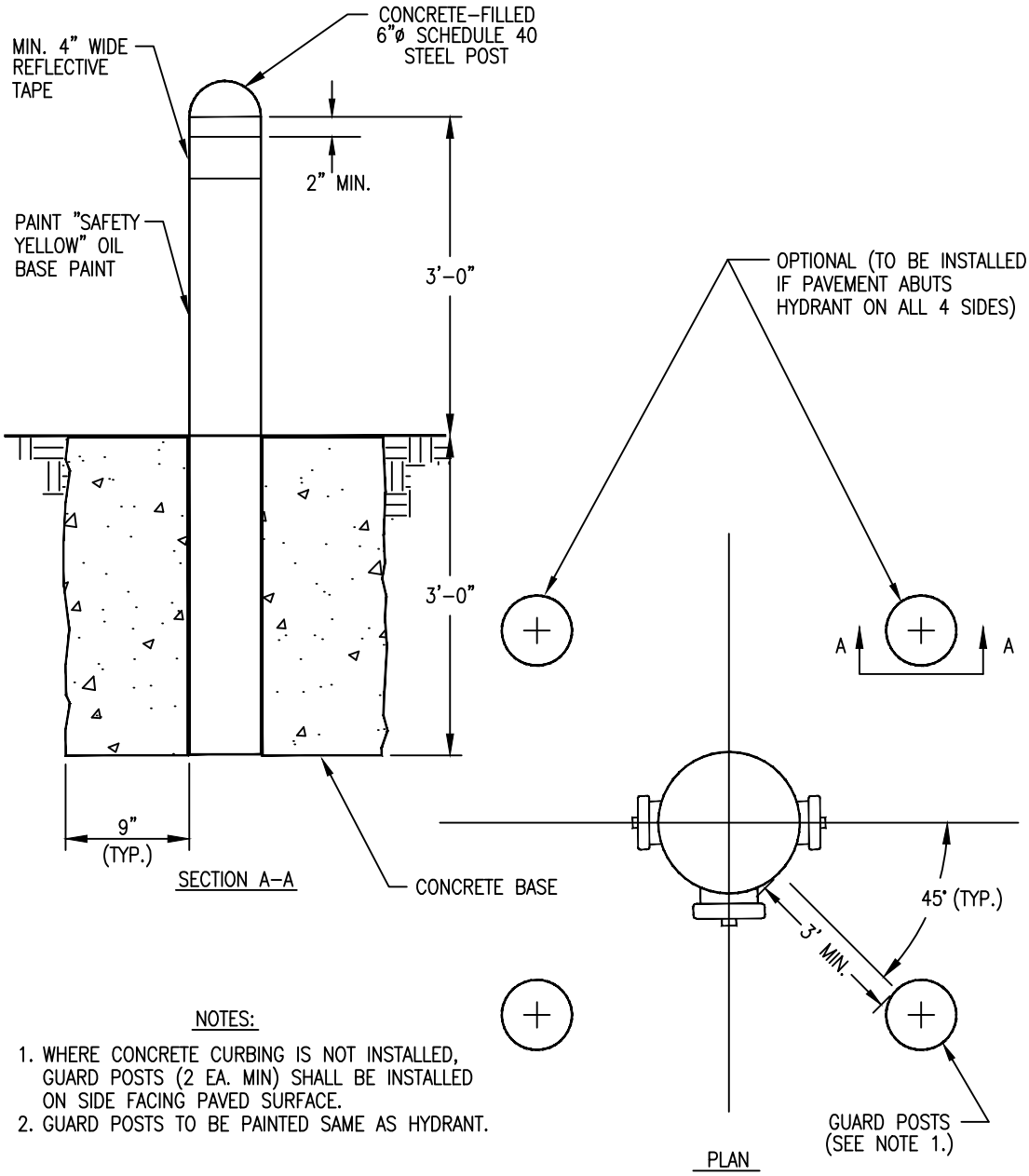

NOTES:

1. WHERE CONCRETE CURBING IS NOT INSTALLED, GUARD POSTS (2 EA. MIN) SHALL BE INSTALLED ON SIDE FACING PAVED SURFACE.
2. GUARD POSTS TO BE PAINTED SAME AS HYDRANT.

MAY 5, 2015

BENTON CITY

HYDRANT GUARD POSTS

DWG # 4-4

SHEET 2 OF 2

S:\4-AutoCAD Drawings\BENTON CITY GENERAL\STD DETAILS\4-4-2 HYDRANT.dwg

WHEN EXISTING WATERLINE REQUIRES THE IN-LINE INSTALLATION OF A VALVE, REDUCER OR FLANGE ADAPTER, THEN ALL CONNECTIONS TO THE TEE OR VALVE SHALL BE FLANGED.

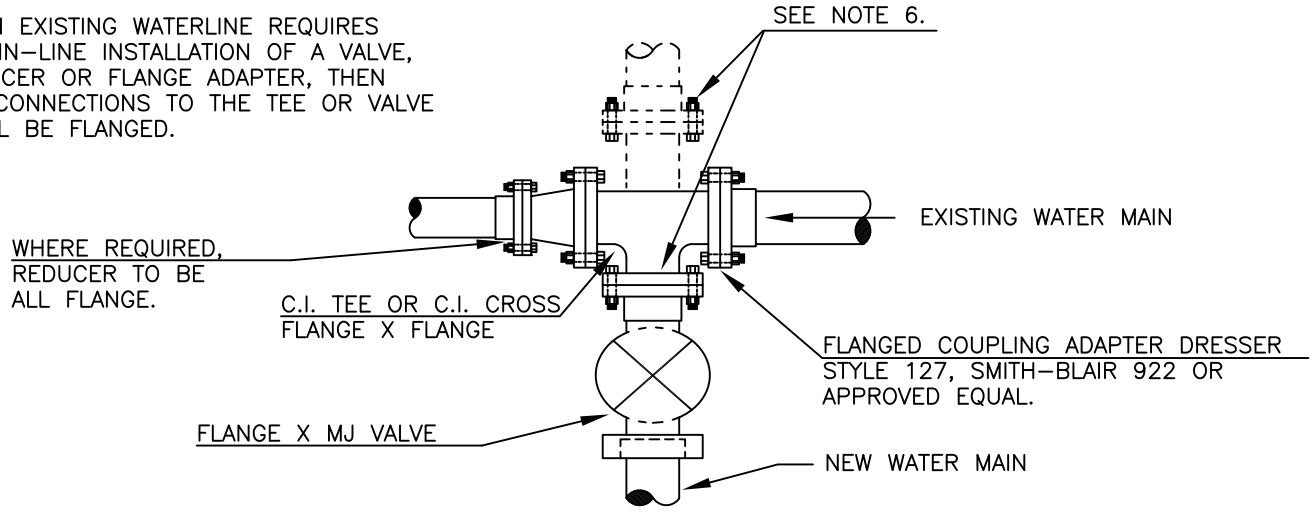

CUT-IN TEE

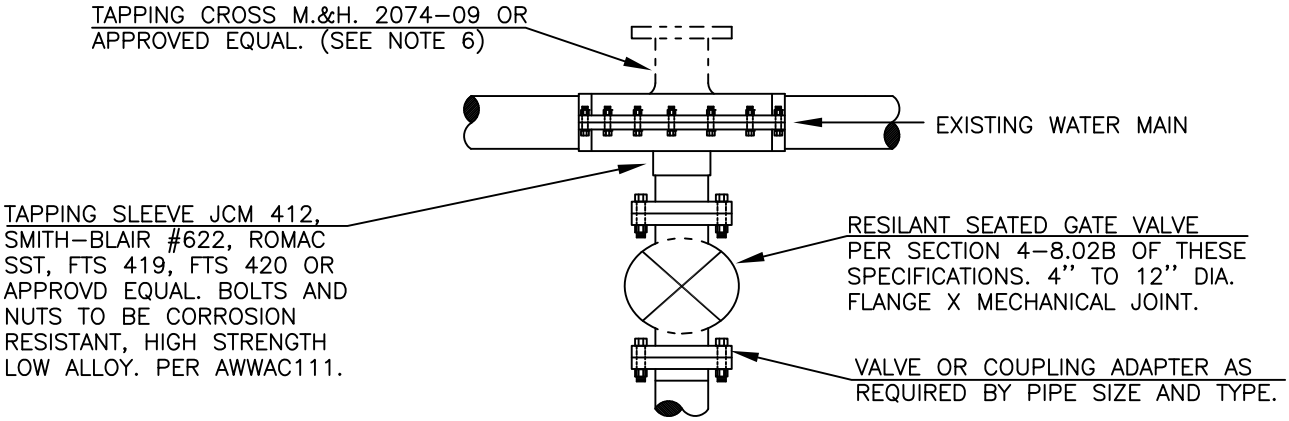

TAPPING SLEEVE AND VALVE

NOTES:

1. CONTRACTOR TO DIG & VERIFY MAIN SIZE AND PIPE PRIOR TO ORDERING MATERIALS.
2. CHLORINATE AND TAG VALVE & FITTINGS PER SECTION 4-14 OF THESE SPECIFICATIONS.
3. MATERIALS TO BE ON THE THE JOB PRIOR TO SCHEDULING SHUTDOWNS OR TAPS.
4. MAXIMUM TAP TO EXISTING LINE NOT TO EXCEED 50% OF MAIN DIAMETER ON A.C. OR P.V.C. PIPE; OR MORE THEN 75% OF THE MAIN DIAMETER FOR STEEL OR DUCTILE IRON PIPE. MAX. TAP FOR CROSS NOT TO EXCEED 50% OF MAIN.
5. INSTALL THRUST BLOCKS PER STD. DRAWING 4-6
6. ON STEEL PIPE, CONTRACTOR TO RESTORE ALL DISTURBED COAL TAR AND WRAPPING.

JULY 12, 2013

BENTON CITY

TAPPING WATER MAINS

DWG # 4-5

S:BCGEN/DETAILS/4-5 TAPPING.DWG

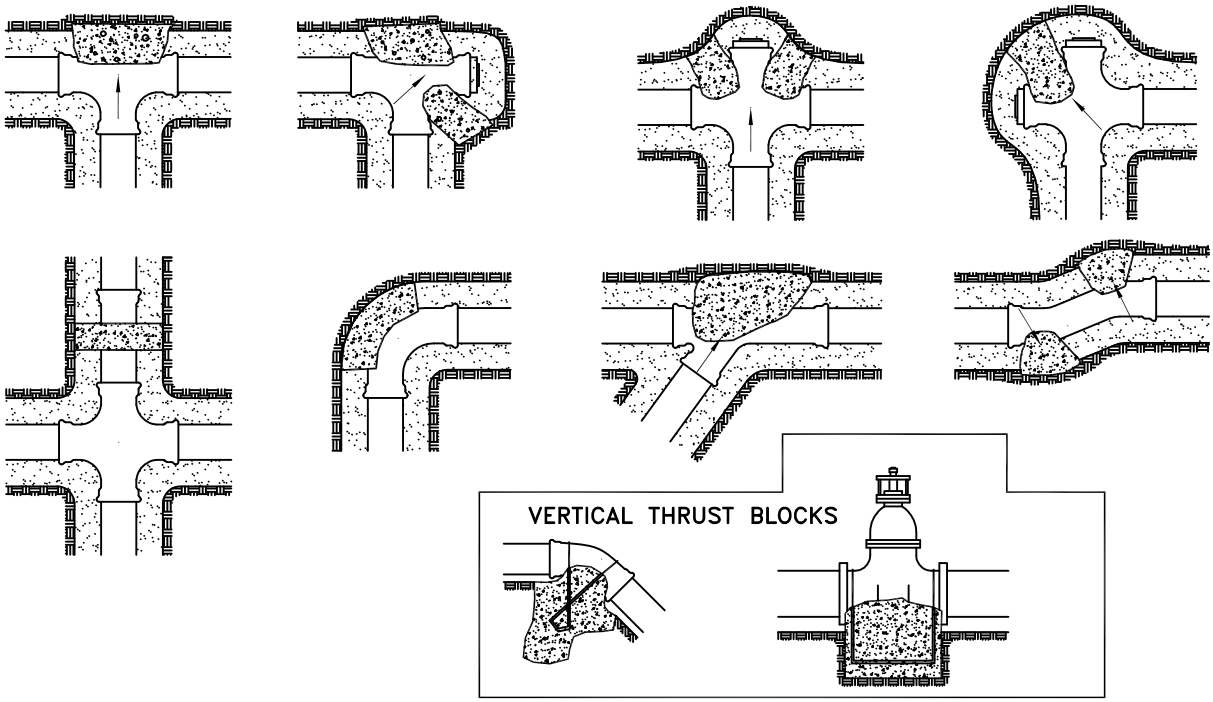

Pipe Size in Inches	HORIZONTAL THRUST BLOCKS MIN. BEARING AREA IN SQUARE FEET				VERTICAL THRUST BLOCKS MIN. VOLUME IN CUBIC YARDS		
	Tees, Wyes & Dead Ends	90° Bend	45° Bend	11 1/4° 22 1/2° Bend	45° Vertical Bend	11–1/4° 22–1/2° Vert. Bend	Restrained Valve (see note 5)
4 & Smaller	0.94	1.33	0.72	0.37	0.37	0.19	0.48
6	2.12	3.00	1.62	0.83	0.83	0.42	1.08
8	3.77	5.33	2.89	1.47	1.47	0.75	1.93
10	5.89	8.33	4.51	2.30	2.30	1.17	3.01
12	8.48	12.00	6.49	3.31	3.32	1.69	4.33
14	11.55	16.33	8.84	4.50	4.51	2.30	5.90
16	15.08	21.33	11.54	5.88	5.90	3.01	7.70
18	19.09	26.99	14.61	7.45	7.46	3.80	9.75
20	23.56	33.32	18.03	9.19	9.21	4.70	12.04
24	33.93	47.98	25.97	13.24	13.27	6.76	17.33

NOTES:

1. Concrete thrust blocking to be poured against undisturbed earth.
2. Keep concrete clear of joint and accessories.
3. Above bearing areas and volumes are calculated at a soil bearing capacity of 2000 PSF and a test pressure of 150 PSI.
4. Thrust blocks for vertical upward bends shall be the same as for horizontal bends.
5. When called for on the construction drawings or contract special provisions, valves shall have concrete restraint blocks as specified above, unless the valve is flanged to a tee, cross or similar fitting or another method of restraint acceptable to the engineer is provided.

JULY 12, 2013

BENTON CITY

THRUST BLOCKING

DWG # 4–6

SHEET 1 OF 2

S:BCGEN/DETAILS/4–6–1 THRUST BLOCK.DWG

RESTRAINED PIPE LENGTH (FEET)

TEE BRANCH AND LENGTH EACH SIDE OF BEND

		TYPE OF FITTINGS											
PIPE DIAMETER		TEE BRANCH		90° BEND		45° BEND		22 1/2° BEND		11 1/4° BEND		DEAD END VALVE OR PLUG, AND FIRE HYDRANTS	
STATIC TEST PRESSURE (PSI)		150	200	150	200	150	200	150	200	150	200	150	200
6 INCH	PVC	60	84	27	36	11	15	5	7	3	4	65	87
	D.I.P.	46	63	23	31	10	13	5	6	2	3	49	65
8 INCH	PVC	81	110	34	46	14	19	7	9	3	5	84	112
	D.I.P.	61	82	30	40	12	17	6	8	3	4	63	84
12 INCH	PVC	118	158	48	64	20	26	10	13	5	6	120	159
	D.I.P.	88	118	42	56	18	23	8	11	4	6	90	119
16 INCH	DUCTILE IRON	113	152	54	71	22	30	11	14	5	2	THRUST BLOCK	THRUST BLOCK
20 INCH	DUCTILE IRON	137	184	64	85	26	35	13	17	6	8		
24 INCH	DUCTILE IRON	161	216	74	98	30	41	15	20	7	10		
30 INCH	DUCTILE IRON	149	260	87	116	36	48	17	23	9	12		
36 INCH	DUCTILE IRON	223	300	100	132	41	55	20	26	10	13		

CALCULATIONS ARE BASED ON INSTALLATION IN POORLY GRADED SANDS, GRAVEL AND GRAVEL –SAND MIXTURES (GM & SM), TYPE 3 TRENCH – PIPE BEDDED IN SELECT NATIVE, OR IMPORTED EARTH BEDDING, TO A DEPTH OF 6–INCHES OVER THE PIPE (STD. DWG. 4–7) A MINIMUM 3 FEET OF COMPACTED PIPE BURY AT THE TIME OF THE PRESSURE TEST AND A SAFETY FACTOR OF 1.5 : 1 TO ALLOW FOR SITE CONDITION VARIABLES

NOTES:

1. FOR DESIGN FORMULAS, CALCULATIONS AND ADDITIONAL INFORMATION, THE TABLE IS BASED ON THE RESTRAINT CALCULATIONS FOUND AT WWW.ROMAC.COM/RESTRAINT/INDEX.HTM FOR ADDITIONAL RESTRAINT REQUIREMENTS AND SPECIFICATIONS, SEE CITY STANDARD SPECIFICATION SECTION 4–8.02 G. THE RESTRAINED PIPE LENGTH APPLIES TO CONDITIONS WHERE A CONCRETE THRUST BLOCK IS NOT USED.
2. IF POLYETHYLENE WRAPPED D.I.P. IS SPECIFIED, INDEPENDENT CALCULATIONS ARE REQUIRED. DO NOT USE THE ABOVE TABLE, WHICH IS FOR STANDARD DIP ONLY.
3. EVERY JOINT WITHIN THE DESIGNATED RESTRAINT LENGTH MUST BE RESTRAINED. IF THE REQUIRED RESTRAINT LENGTH IS SHORTER THAN A SINGLE SECTION OF PIPE BEING USED, ONLY THE FITTING CONNECTION REQUIRES RESTRAINT. THE RESTRAINT LENGTH GIVEN IN THE TABLE, IS THE REQUIRED LENGTH ON EACH SIDE OF THE BEND, OR ON THE TEE BRANCH AS APPLICABLE.
4. THRUST BLOCKS ARE REQUIRED FOR ALL CONNECTIONS TO AC PIPE AND WHEN AN AC PIPE CONNECTION IS LOCATED ANYWHERE WITHIN THE DESIGNATED RESTRAINT LENGTH.
5. THRUST BLOCKS ARE REQUIRED IF THE DESIGNATED RESTRAINT LENGTH CANNOT BE OBTAINED. SPECIAL ATTENTION NEEDS TO BE GIVEN TO DEAD END STUBS AND FIRE HYDRANT INSTALLATIONS. IF THE LENGTH OF THE FEEDER PIPE, FROM THE MAIN LINE TEE TO THE END CAP, OR HYDRANT, IS LESS THAN THE DESIGNATED DEAD END RESTRAINT LENGTH, THRUST BLOCKS ARE REQUIRED AT BOTH THE TEE AND AT THE END CAP, OR HYDRANT. WHEN THE SPECIFIED CONDITIONS ALLOW THE USE OF MECHANICAL RESTRAINTS, THE RESTRAINT LENGTH REQUIREMENTS FOR BOTH THE TEE AND THE END CAP, OR HYDRANT MUST BE MET.
6. APPROVED METHODS OF RESTRAINED PIPE SHALL BE :
   a. FOR PVC PIPE, SERIES 2000PV MEGALUG RESTRAINTS AND FOR SLIP JOINTS, SERIES 1500TD BELL RESTRAINT HARNESS, OR EQUALS.
   b. FOR DUCTILE IRON PIPE, SERIES 1100 MEGALUG RESTRAINTS AND FOR SLIP JOINTS, SERIES 1500 RESTRAINT HARNESS THROUGH 12 INCH, OR SERIES 1700 RESTRAINT HARNESS FOR LARGER PIPE, OR EQUALS.

JULY 12, 2013

BENTON CITY

MECHANICAL RESTRAINT

DWG # 4–6

SHEET 2 OF 2

S:BCGEN/DETAILS/4–6–2 MECH REST.DWG

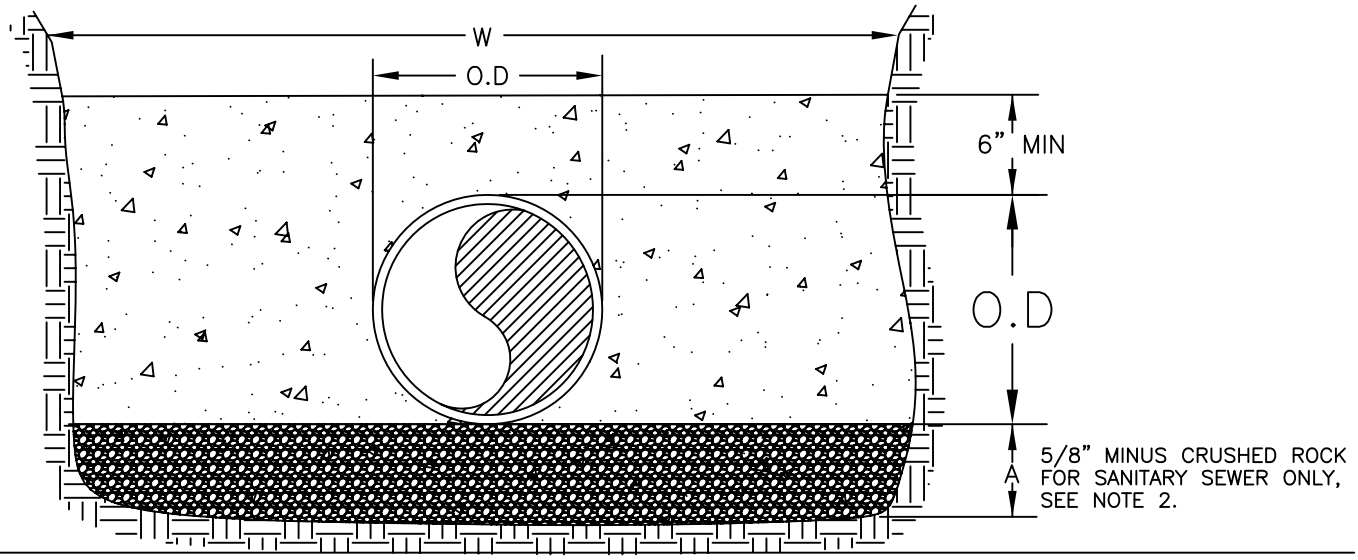

A=4" FOR 27" PIPE & SMALLER;
6" FOR ALL PIPE 30" DIA. & LARGER

1. SELECT EXCAVATED AND IMPORTED BEDDING MATERIAL ABOVE THE BOTTOM OF PIPE FOR STORM DRAINAGE PIPE, SANITARY SEWER AND WATER MAINS SHALL BE WELL GRADED SELECT EXCAVATED, OR IMPORTED MATERIAL, FREE OF ROCKS GREATER THAN 1-INCH DIAMETER.
2. BEDDING MATERIAL BELOW THE PIPE (ZONE A) SHALL BE 5/8" MINUS CRUSHED ROCK FOR SANITARY SEWER PIPES. BEDDING MATERIAL IN ZONE A FOR STORM DRAINAGE PIPE AND WATER MAINS SHALL BE IN ACCORDANCE WITH THE REQUIREMENTS OF NOTE 1.
3. TRENCH WIDTH SHALL BE KEPT AS NARROW AS CONDITIONS ALLOW, EXCEPT THAT "W" SHALL BE 36 INCHES MINIMUM FOR PIPE 15 INCHES I.D. OR SMALLER AND MINIMUM 1 1/2 TIMES THE I.D. IN INCHES PLUS 18 INCHES, FOR PIPE 18 INCHES OR LARGER.
4. HAND TAMP UNDER PIPE HAUNCHES.
5. PROVIDE UNIFORM SUPPORT UNDER PIPE BARREL.
6. COMPACT BEDDING MATERIAL TO 95% MAXIMUM DENSITY EXCEPT DIRECTLY OVER THE PIPE, WHERE BEDDING MATERIAL SHALL BE HAND TAMPED ONLY.
7. FOR PAVEMENT RESTORATION REQUIREMENTS. SEE CITY OF BENTON CITY STANDARD DRAWINGS 2-6 AND 2-7.

JULY 12, 2013

BENTON CITY

PIPE BEDDING DETAIL

DWG #
4-7

S:BCGEN/DETAILS/4-7 BEDDING.DWG

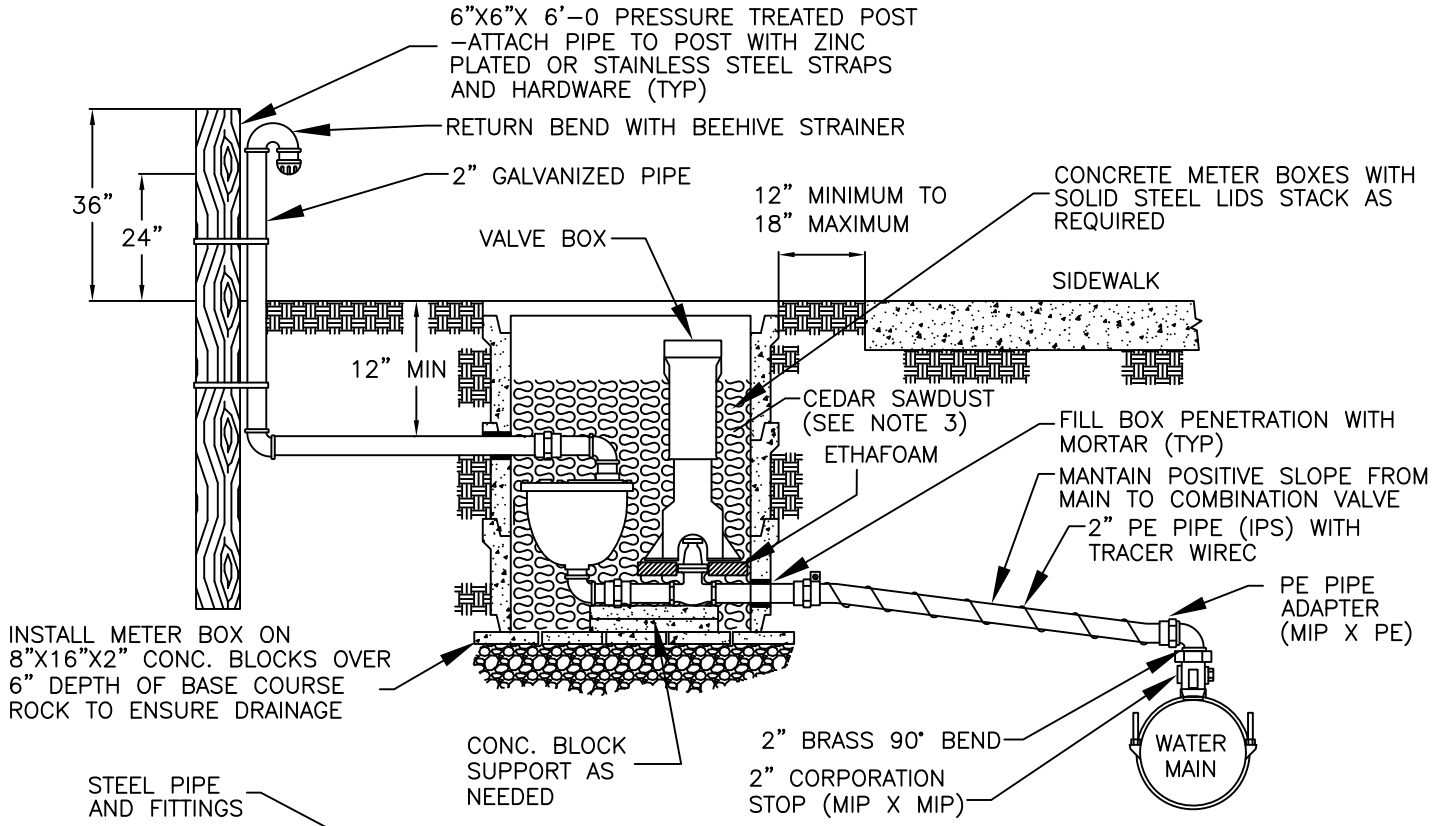

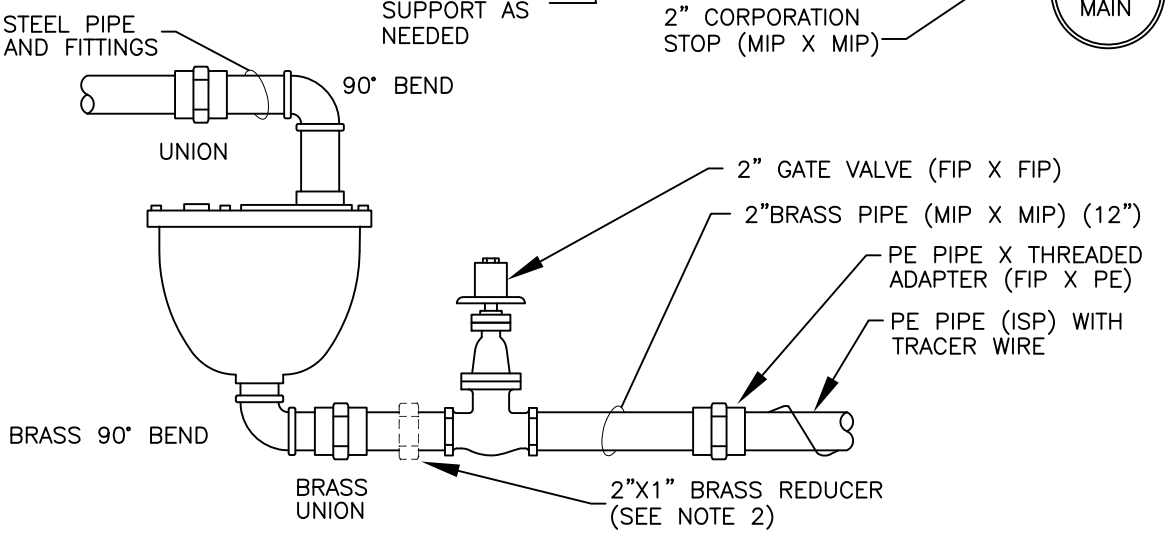

NOTES:

1. COMBINATION AIR RELEASE AND VACUUM VALVE SHALL BE A 2" SIZE MINIMUM -UNLESS OTHERWISE SHOWN ON THE CONSTRUCTION DRAWINGS.
2. FOR 1" COMBINATION VALVE INSTALL 2"X1" REDUCER BETWEEN GATE VALVE AND UNION.
3. FILL METER BOX WITH SAWDUST AFTER TESTING AND INSPECTION.
4. SET METER BOX FLUSH WITH SIDEWALK OR CURB ELEVATION. WHEN LOCATED IN LAWN OR LANDSCAPE AREA. SET METER BOX APPROXIMATELY 2 INCHES ABOVE FINISHED GRADE.

JULY 12, 2013

BENTON CITY

AIR/VACCUM RELEASE VALVE

DWG # 4-8

S:BCGEN/DETAILS/4-8 AIR-VAC.DWG

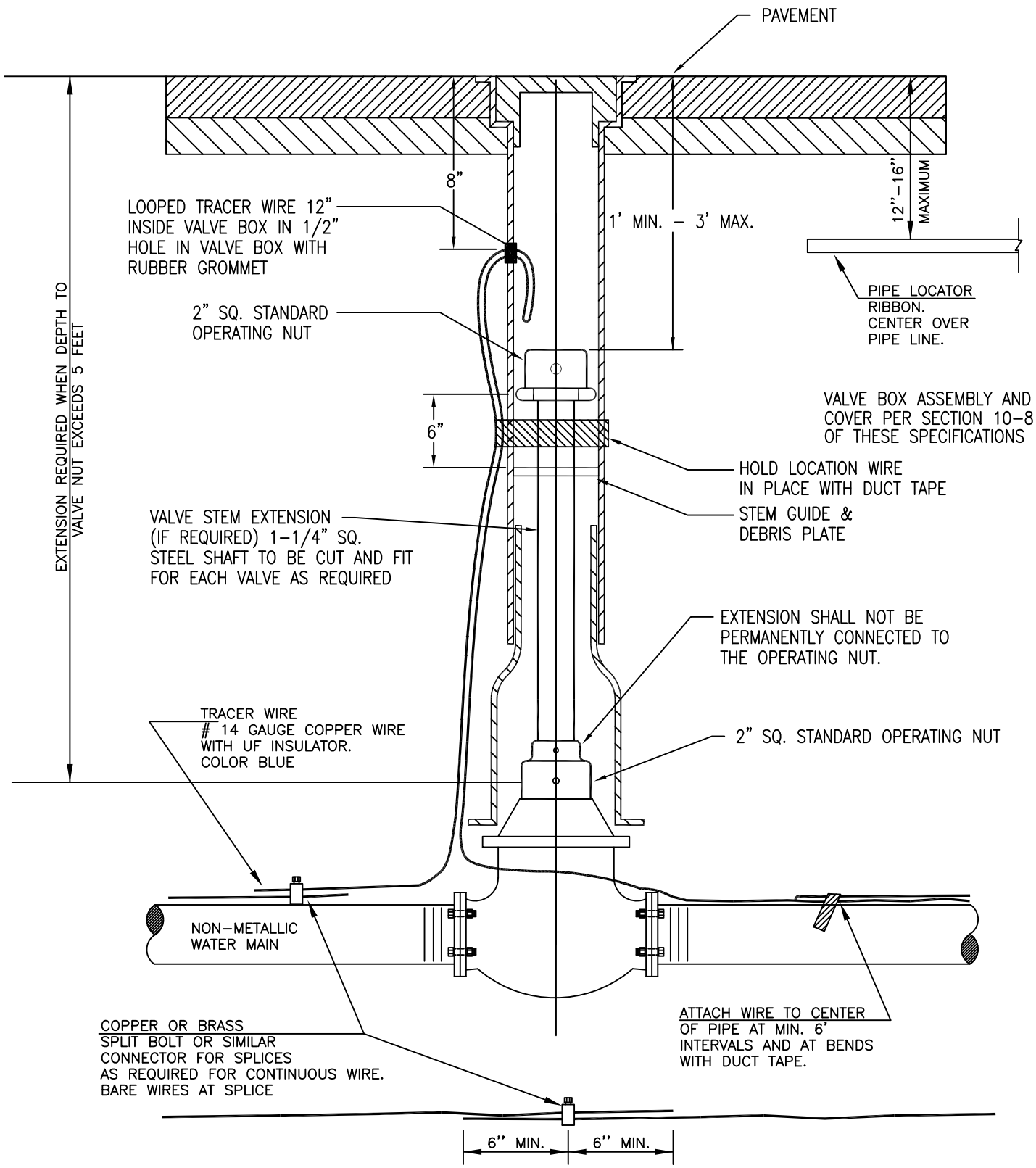

MAY 6, 2013

BENTON CITY

TRACER WIRE INSTALLATION & VALVE STEM EXTENSION DETAIL

DWG # 4–9

S:BCGEN/DETAILS/4–9 TRACER WIRE.DWG

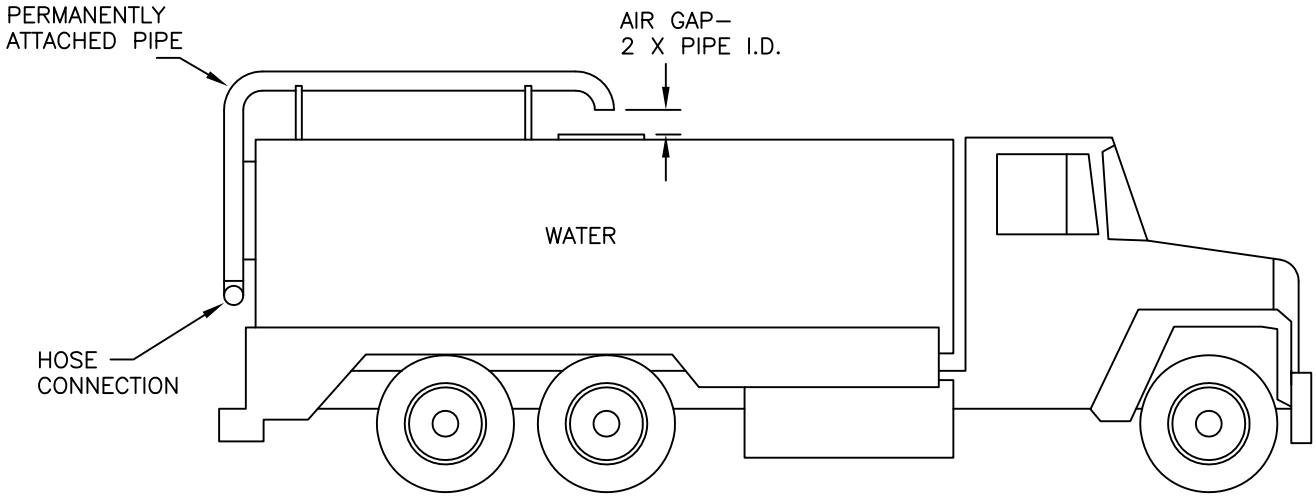

JULY 12, 2013

BENTON CITY

WATER TRUCK W/ AIR GAP

DWG #

4–10

S:BCGEN/DETAILS/4–10 WATER TRUCK.DWG

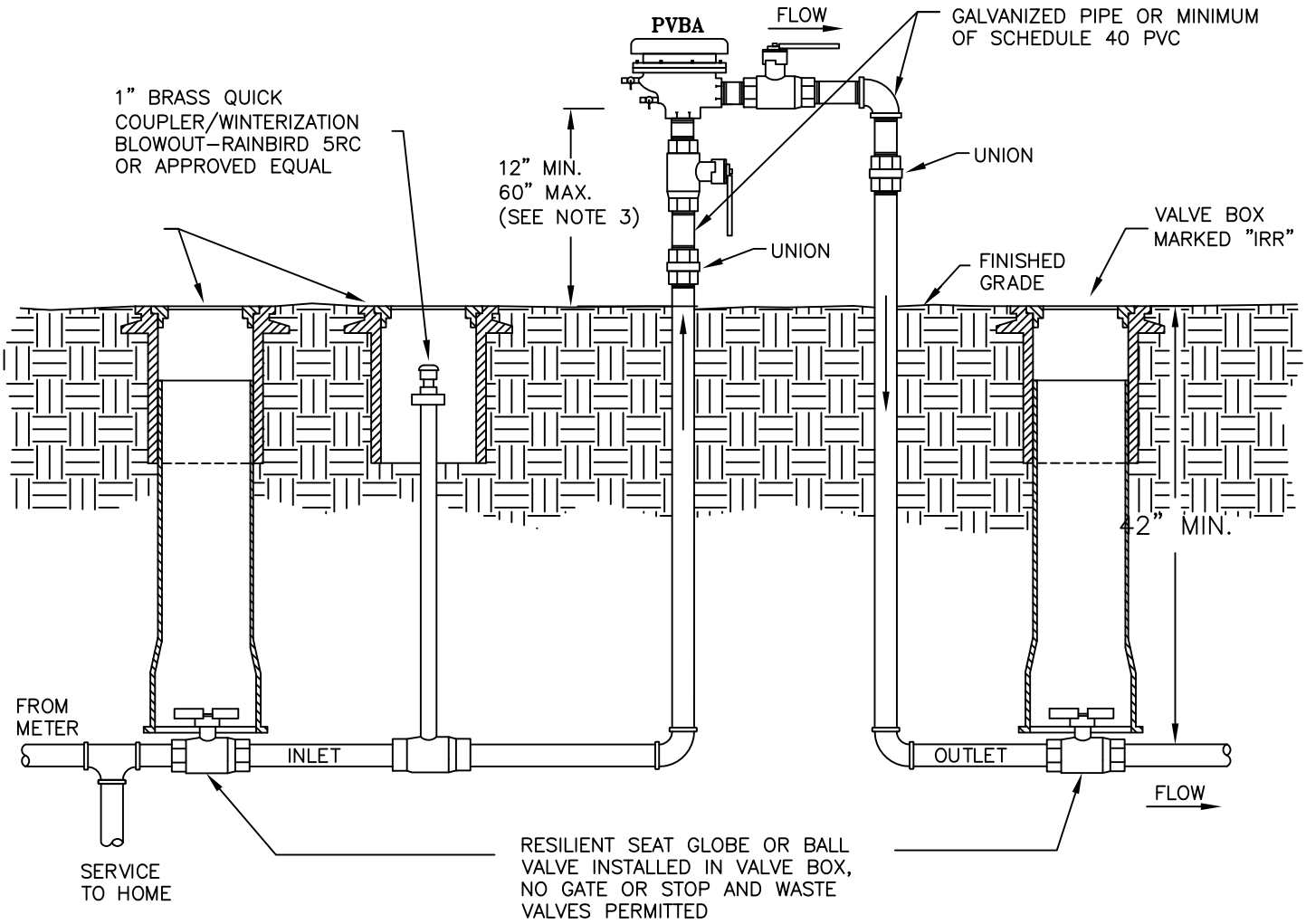

NOTES:

1) PRESSURE VACUUM BREAKER ASSEMBLY (PVBA) MAY BE INSTALLED ON LOW HAZARD POTABLE WATER SUPPLY SYSTEMS ONLY.

2) A CITY OF BENTON CITY CROSS CONNECTION SPECIALIST MUST BE PRESENT DURING INSTALLATION.

3) PVBA MUST BE INSTALLED NOT LESS THAN 12'' ABOVE THE HIGHEST POINT OF USE AND NOT MORE THAN 60'' ABOVE FINISH GRADE.

JULY 12, 2013

BENTON CITY

PRESSURE VACUUM BREAKER ASSEMBLY DETAIL

DWG #

4–11

S:BCGEN/DETAILS/4–11 PVBA.DWG

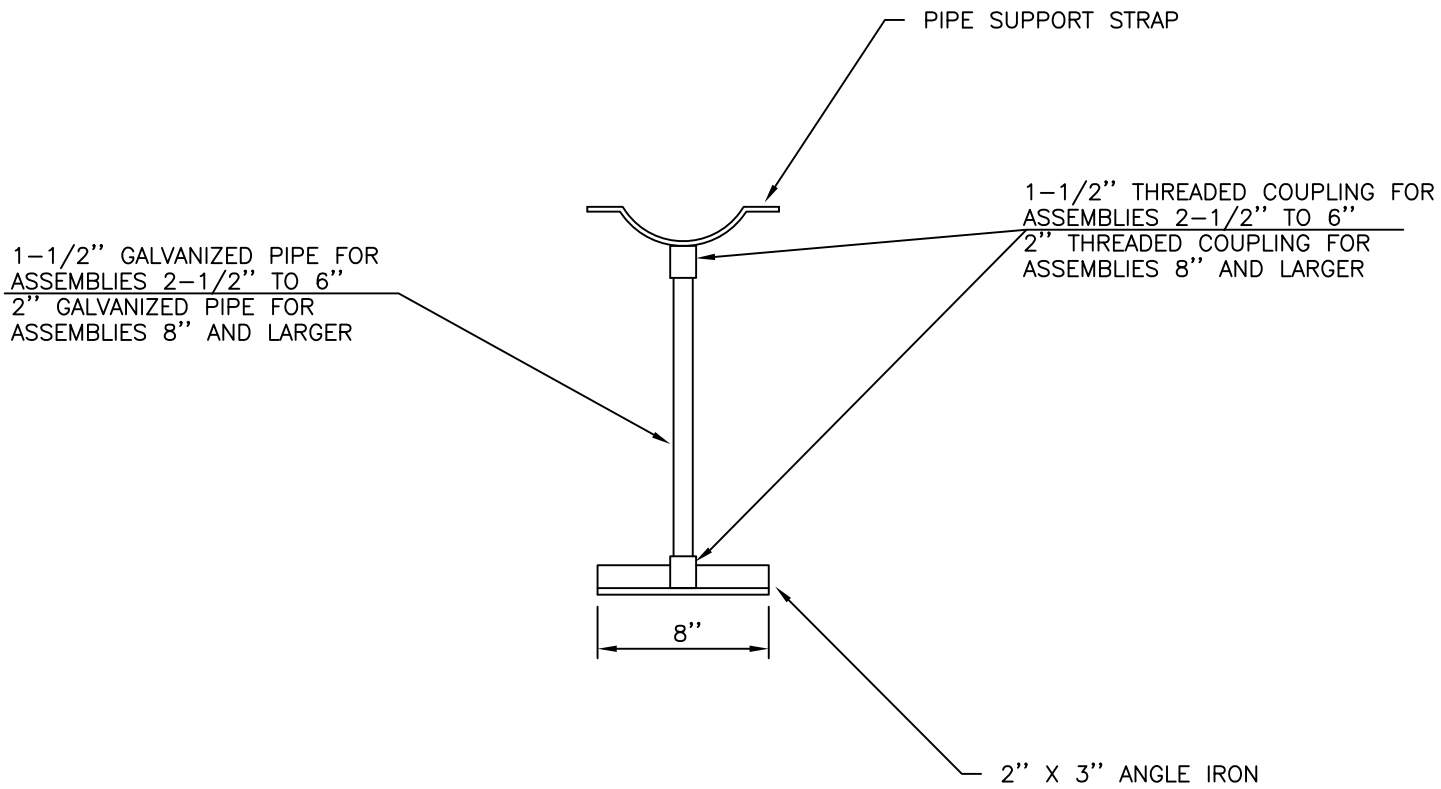

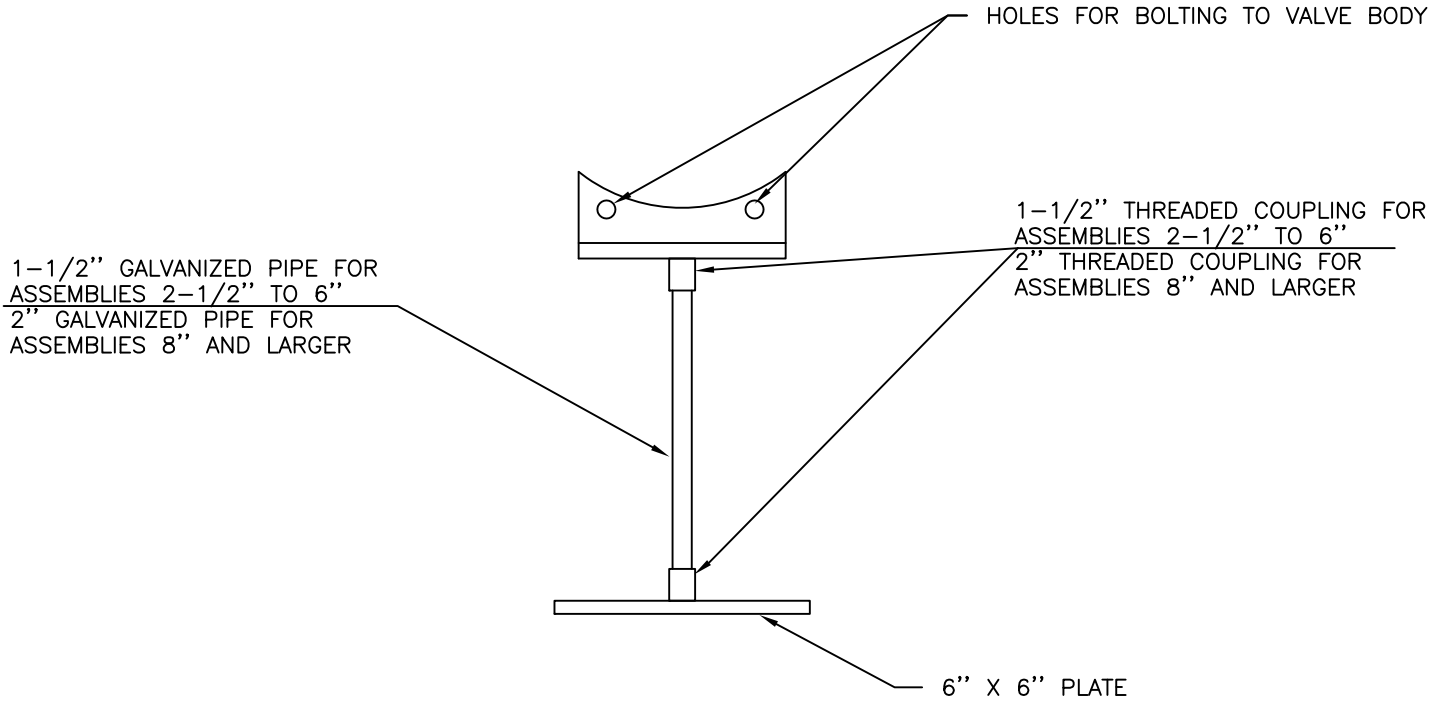

JULY 12, 2013

BENTON CITY

PIPE SUPPORTS

DWG #

4-12

S:BCGEN/DETAILS/4-12 PIPE SUPPORT.DWG

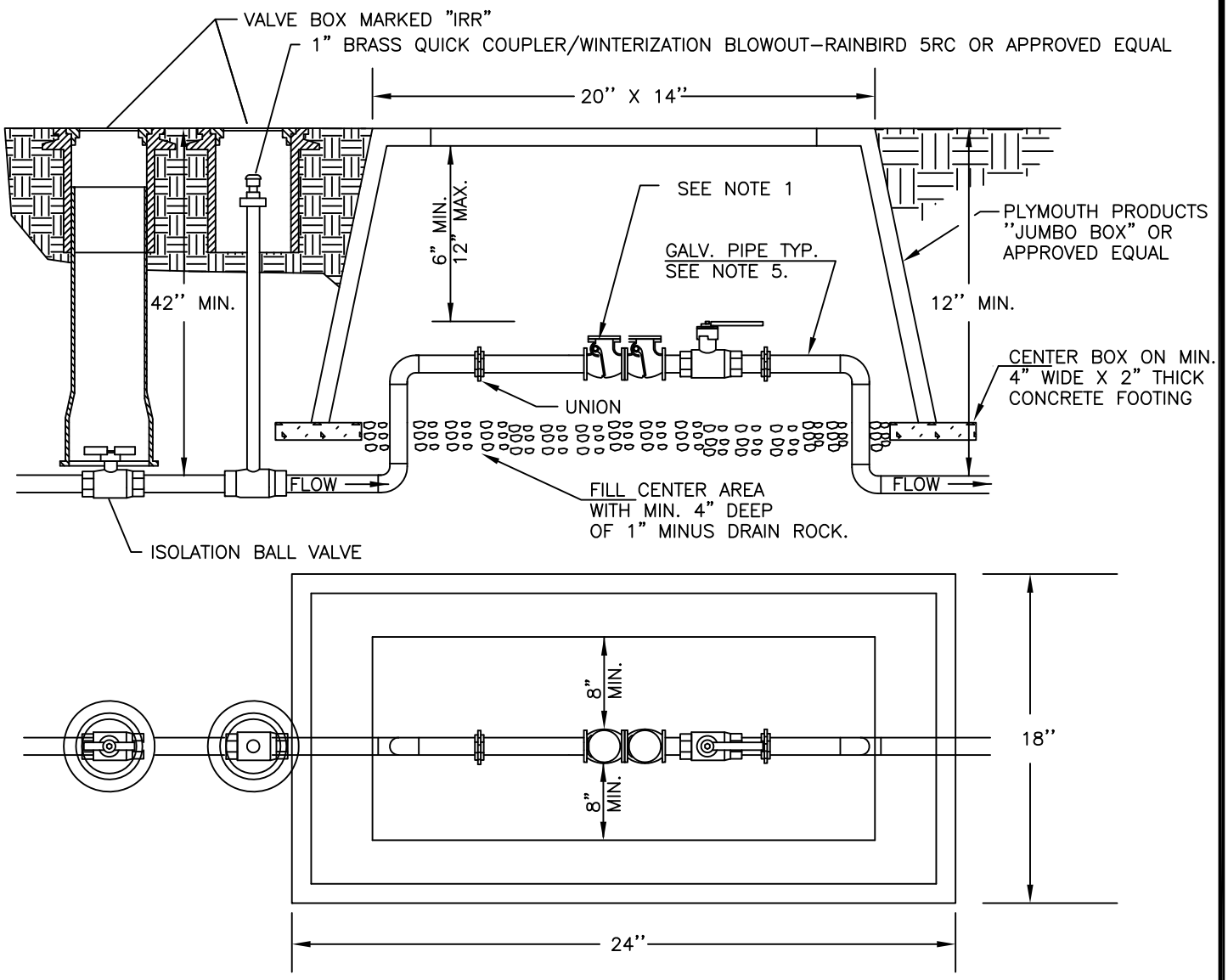

DOUBLE CHECK VALVE ASSEMBLY
FOR ASSEMBLIES 3/4'' TO 1''

NOTES:

1) MUST BE ON THE LATEST DEPT. OF HEALTH APPROVED LIST OF BACKFLOW PREVENTION ASSEMBLIES.
2) MAY BE INSTALLED BELOW GROUND IN AN APPROVED VAULT.
3) A CITY OF BENTON CITY CROSS CONNECTION SPECIALIST MUST BE PRESENT DURING INSTALLATION.
4) FREEZE PROTECTION IS THE RESPONSIBILITY OF THE OWNER.
5) RISERS AND ALL PIPE IN BOX TO BE GALVANIZED.
6) A LADDER IS REQUIRED IF ACCESS OPENING TO FLOOR EXCEEDS 36''

JULY 12, 2013

BENTON CITY

DOUBLE CHECK VALVE ASSEMBLY

DWG # 4–13

S:BCGEN/DETAILS/4–13 DCVA.DWG

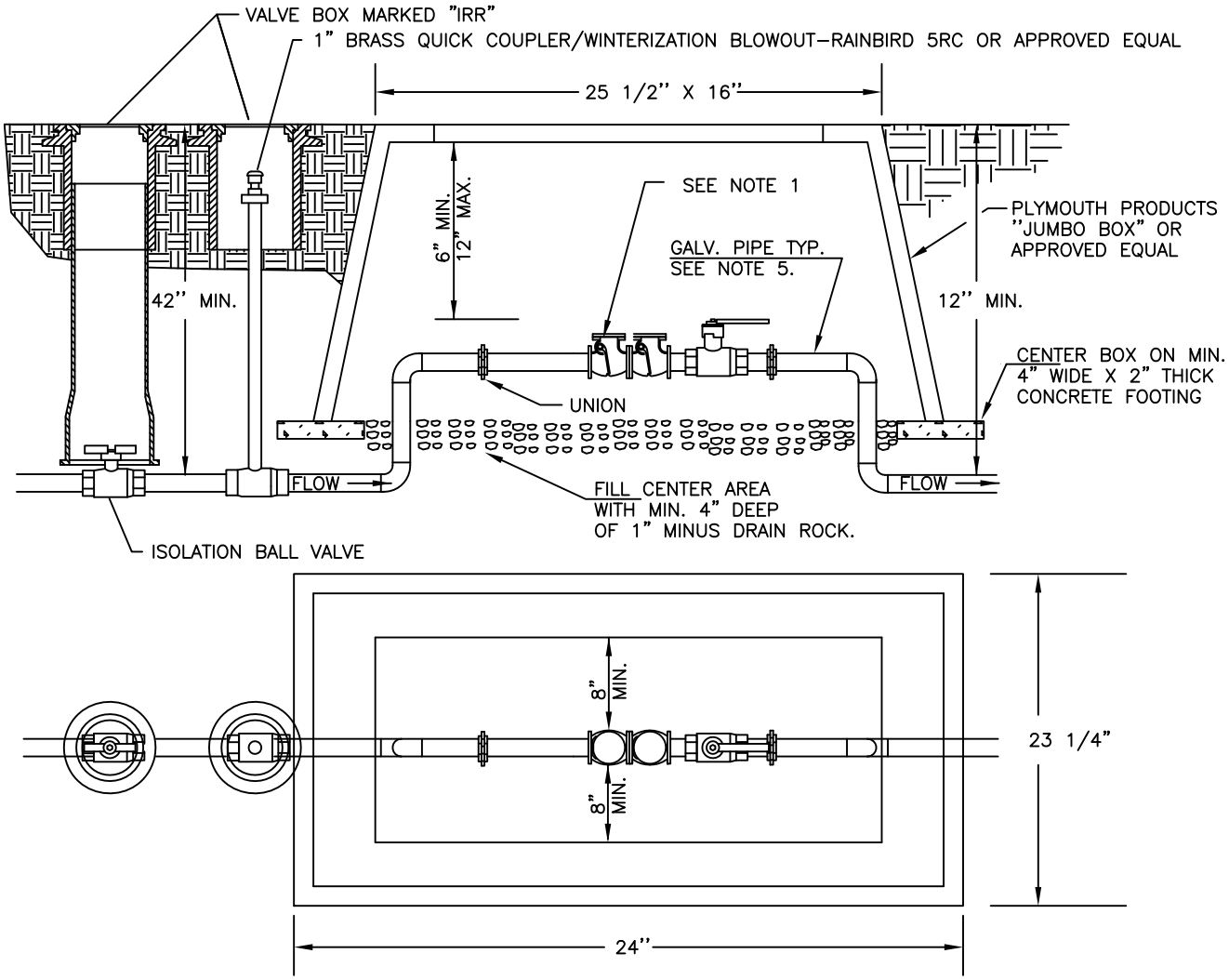

DCVA INSTALLATION

DOUBLE CHECK VALVE ASSEMBLY FOR ASSEMBLIES 1 1/4" TO 2 1/2"

NOTES:

1) MUST BE ON THE LATEST DEPT. OF HEALTH APPROVED LIST OF BACKFLOW PREVENTION ASSEMBLIES.
2) MAY BE INSTALLED BELOW GROUND IN AN APPROVED VAULT.
3) A CITY OF BENTON CITY CROSS CONNECTION SPECIALIST MUST BE PRESENT DURING INSTALLATION.
4) FREEZE PROTECTION IS THE RESPONSIBILITY OF THE OWNER.
5) RISERS AND ALL PIPE IN BOX TO BE GALVANIZED.
6) A LADDER IS REQUIRED IF ACCESS OPENING TO FLOOR EXCEEDS 36"

AUGUST 8, 2013

BENTON CITY

DOUBLE CHECK VALVE ASSEMBLY

DWG # 4–14

S:BCGEN/DETAILS/4–14 DCVA.DWG

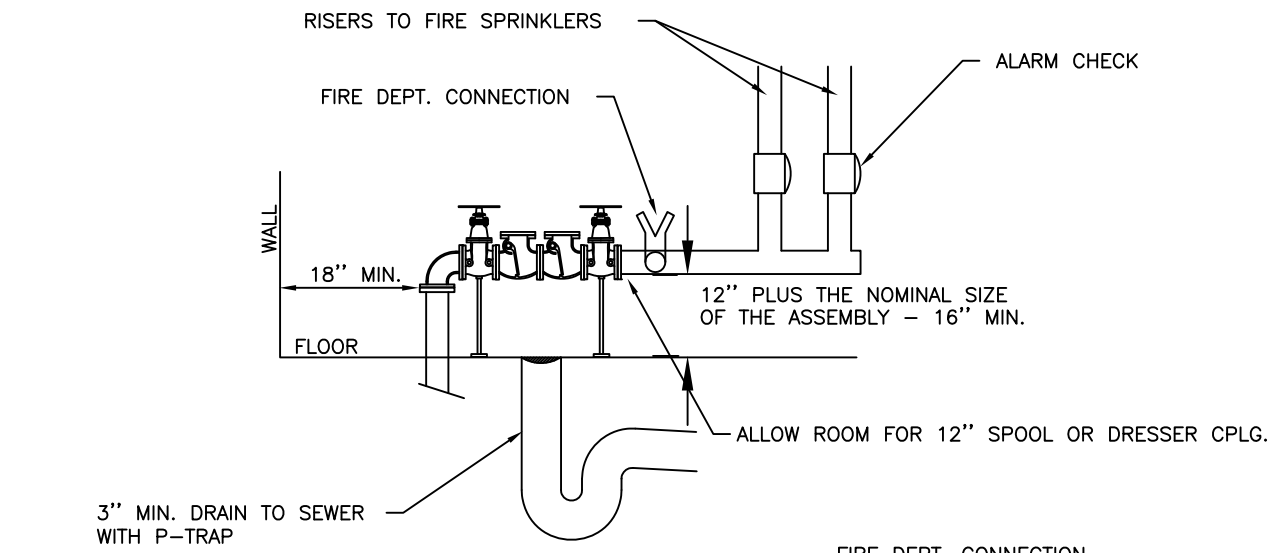

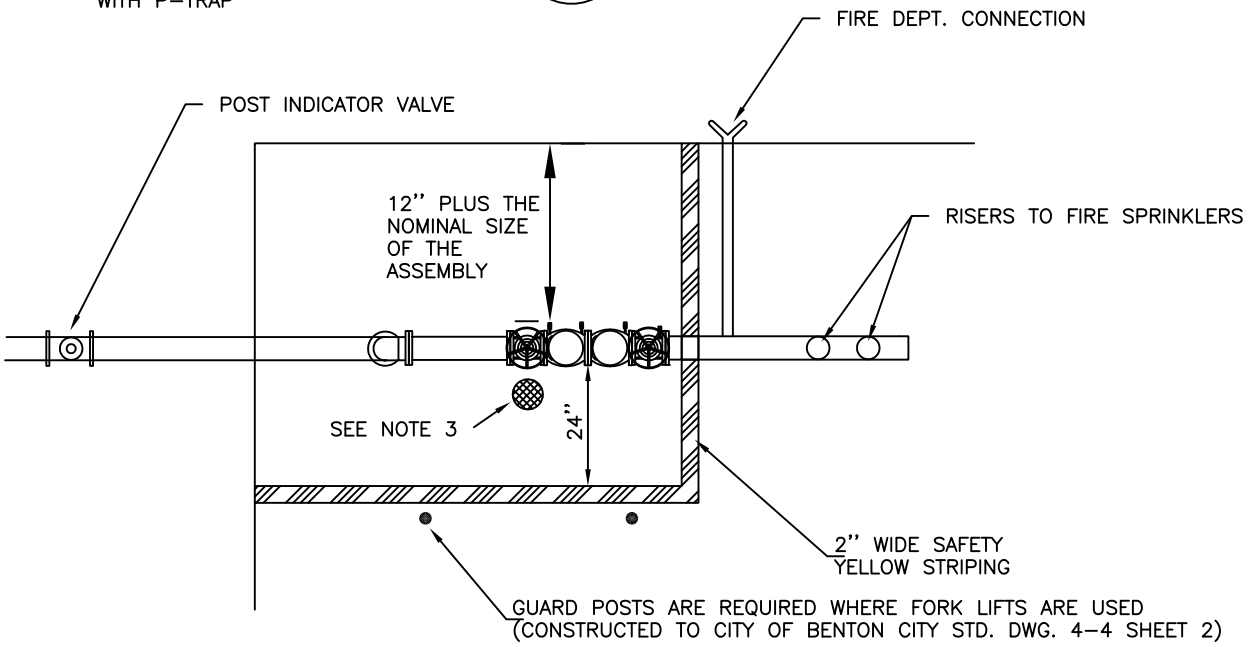

DCVA INSTALLATION

DOUBLE CHECK VALVE ASSEMBLY
FOR ASSEMBLIES 3'' AND LARGER
INSTALLED INSIDE A BUILDING

NOTES:

1) MUST BE ON THE LATEST DEPT. OF HEALTH APPROVED LIST OF BACKFLOW PREVENTION ASSEMBLIES.
2) A CITY OF BENTON CITY CROSS CONNECTION SPECIALIST MUST BE PRESENT DURING INSTALLATION.
3) A MIN. 3" DIA. FLOOR DRAIN IS REQUIRED.

AUGUST 8, 2013

BENTON CITY

DOUBLE CHECK
VALVE ASSEMBLY

DWG #
4–15

S:BCGEN/DETAILS/4–15 DCVA.DWG

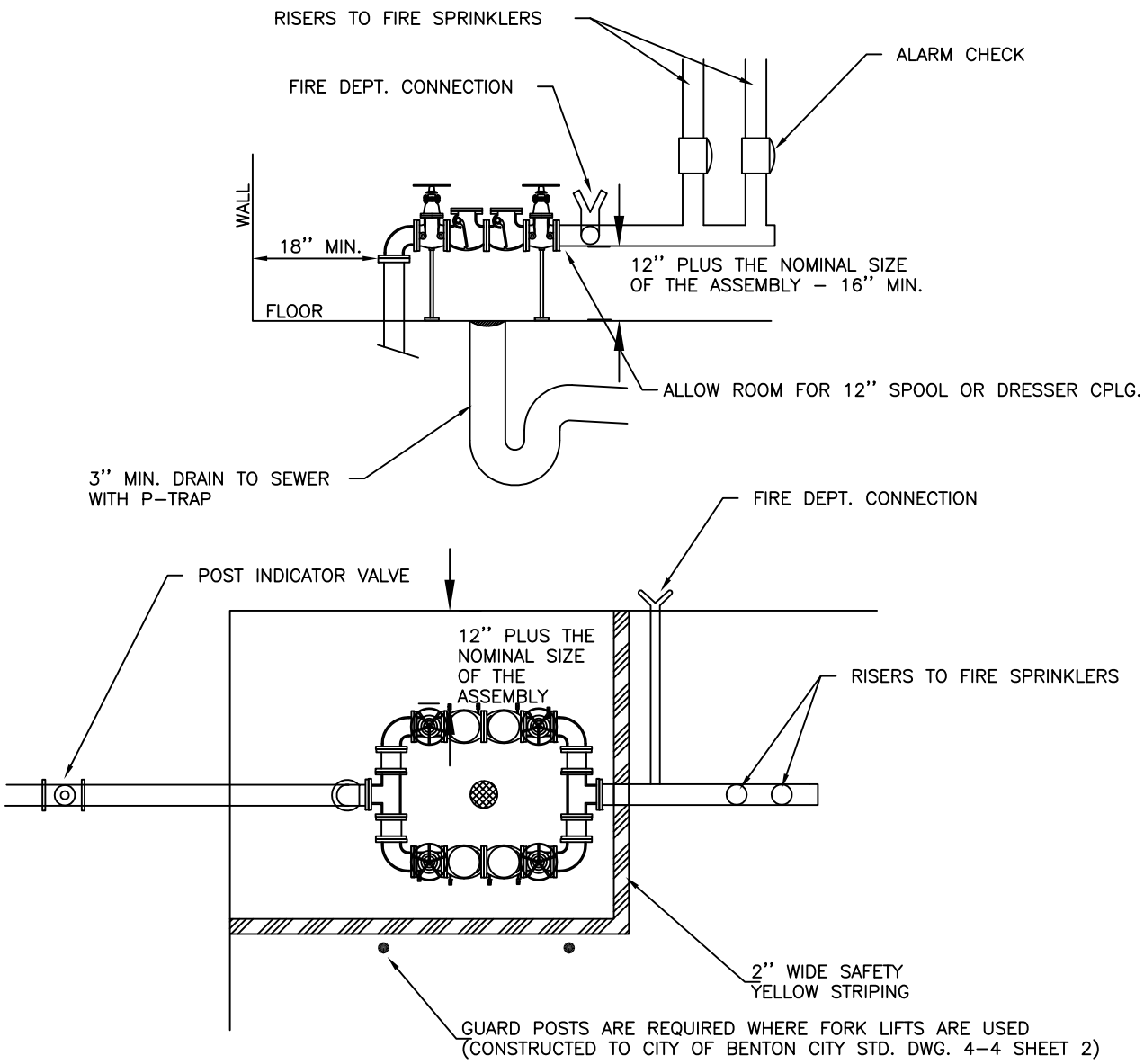

DCVA DUAL INSTALLATION

DOUBLE CHECK VALVE ASSEMBLY
FOR ASSEMBLIES 3'' AND LARGER
INSTALLED INSIDE A BUILDING

NOTES:

1) MUST BE ON THE LATEST DEPT. OF HEALTH APPROVED LIST OF BACKFLOW PREVENTION ASSEMBLIES.
2) A CITY OF BENTON CITY CROSS CONNECTION SPECIALIST MUST BE PRESENT DURING INSTALLATION.
3) A MIN. 3" DIA. FLOOR DRAIN IS REQUIRED.

AUGUST 8, 2013

BENTON CITY

DOUBLE CHECK VALVE ASSEMBLY

DWG # 4–16

S:BCGEN/DETAILS/4–16 DCVA.DWG

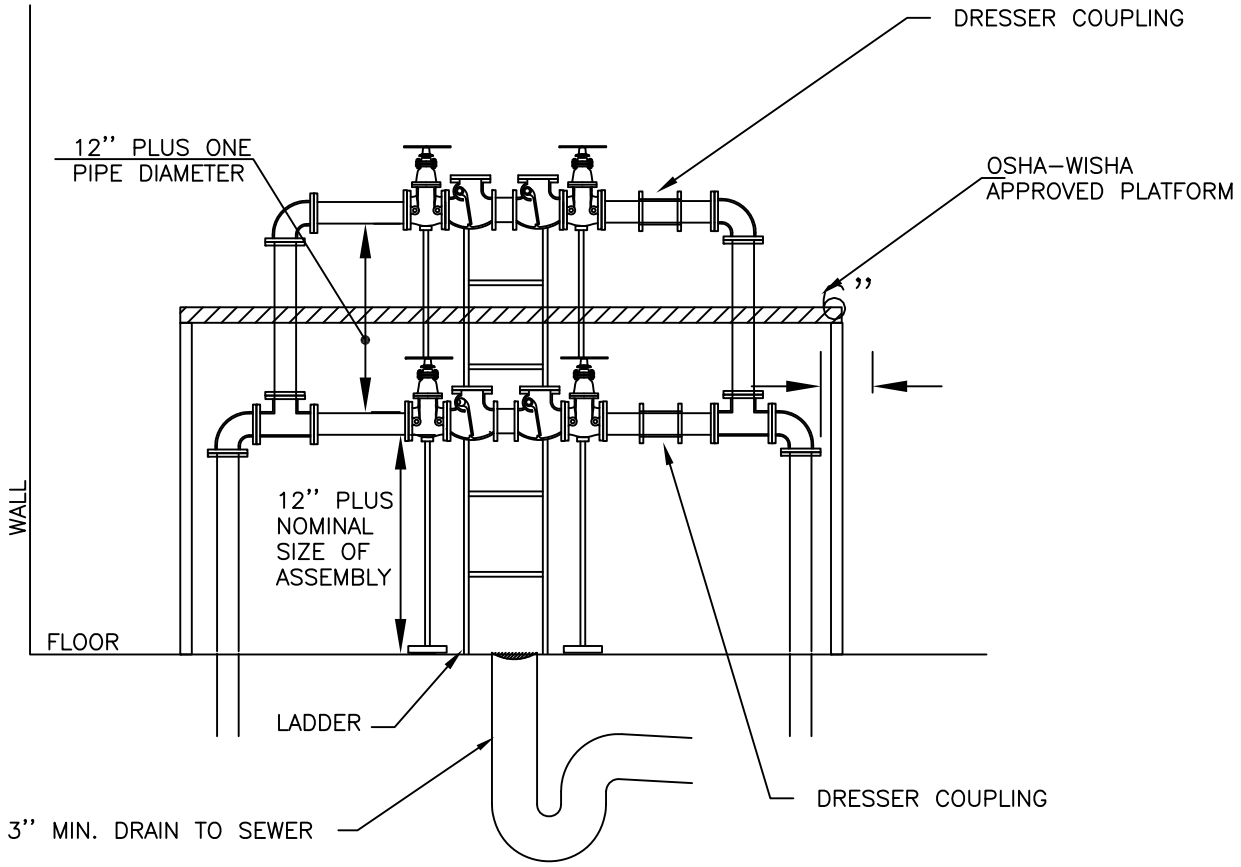

DCVA DUAL INSTALLATION

DOUBLE CHECK VALVE ASSEMBLY
FOR ASSEMBLIES 3'' AND LARGER
INSTALLED INSIDE A BUILDING

NOTES:

1) MUST BE ON THE LATEST DEPT. OF HEALTH APPROVED LIST OF BACKFLOW PREVENTION ASSEMBLIES.
2) MAY BE INSTALLED BELOW GROUND IN AN APPROVED VAULT.
3) A CITY OF BENTON CITY CROSS CONNECTION SPECIALIST MUST BE PRESENT DURING INSTALLATION.
4) FREEZE PROTECTION IS THE RESPONSIBILITY OF THE OWNER.
5) A MIN. 3" DIA. FLOOR DRAIN IS REQUIRED.
6) A LADDER IS REQUIRED IF THE DISTANCE FROM THE ACCESS OPENING TO THE FLOOR EXCEEDS 36''.
7) A SPACE EQUALING 12'' PLUS ONE PIPE DIAMETER IS REQUIRED BETWEEN ASSEMBLIES.
8) AN OSHA–WISHA APPROVED PLATFORM MUST BE ERECTED FOR MAINTENANCE AND TESTING WHEN INSTALLED 60'' ABOVE FLOOR LEVEL.
9) GUARD POST ARE REQUIRED IN AREAS WHERE FORK LIFTS ARE USED (CITY OF BENTON CITY STANDARD DWG 4–4 SHEET 2).

AUGUST 8, 2013

BENTON CITY

DOUBLE CHECK
VALVE ASSEMBLY

DWG #
4–17

S:BCGEN/DETAILS/4–17 DCVA.DWG

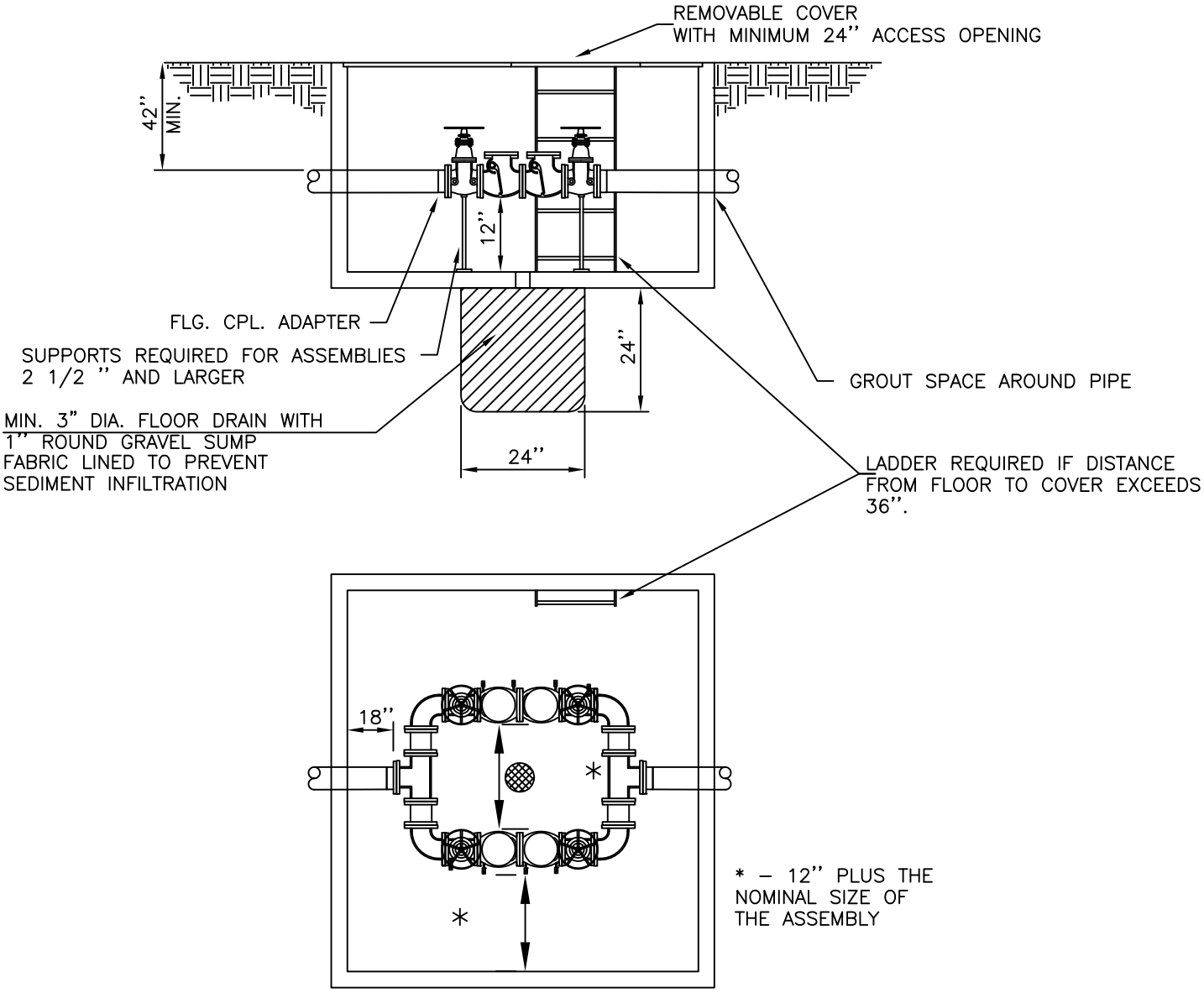

DCVA DUAL INSTALLATION

DOUBLE CHECK VALVE ASSEMBLY
FOR ASSEMBLIES 3'' AND LARGER

NOTES:

1) MUST BE ON THE LATEST DEPT. OF HEALTH APPROVED LIST OF BACKFLOW PREVENTION ASSEMBLIES.
2) MAY BE INSTALLED BELOW GROUND IN AN APPROVED VAULT.
3) A CITY OF BENTON CITY CROSS CONNECTION SPECIALIST MUST BE PRESENT DURING INSTALLATION.
4) FREEZE PROTECTION IS THE RESPONSIBILITY OF THE OWNER.
5) A MIN. 3" DIA. FLOOR DRAIN IS REQUIRED.
6) A LADDER IS REQUIRED IF ACCESS OPENING TO FLOOR EXCEEDS 36''

AUGUST 8, 2013

BENTON CITY

DOUBLE CHECK
VALVE ASSEMBLY

DWG #
4–18

S:BCGEN/DETAILS/4–18 DCVA.DWG

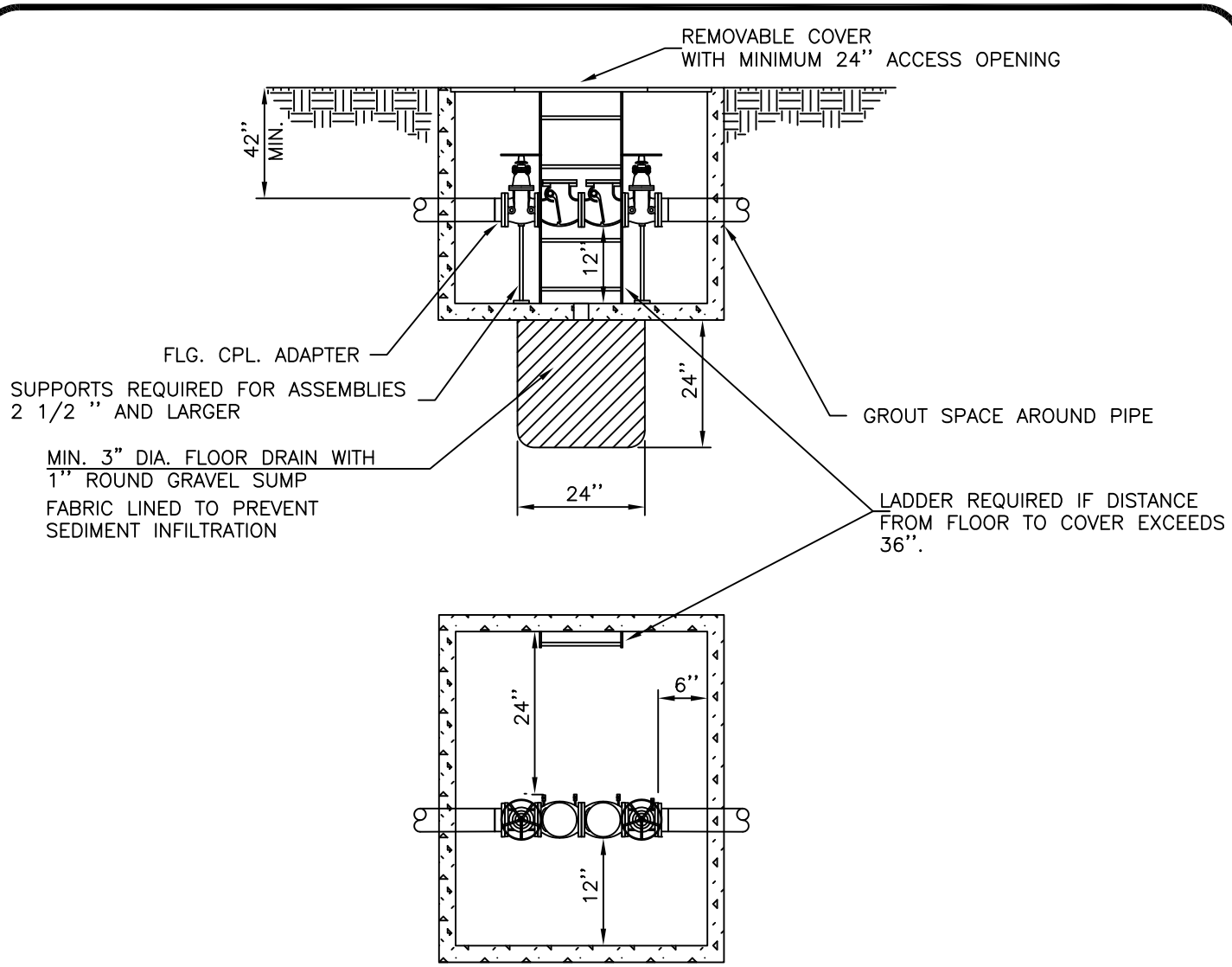

DCVA INSTALLATION

DOUBLE CHECK VALVE ASSEMBLY
FOR ASSEMBLIES 3'' AND LARGER

NOTES:

1) MUST BE ON THE LATEST DEPT. OF HEALTH APPROVED LIST OF BACKFLOW PREVENTION ASSEMBLIES.
2) MAY BE INSTALLED BELOW GROUND IN AN APPROVED VAULT.
3) A CITY OF BENTON CITY CROSS CONNECTION SPECIALIST MUST BE PRESENT DURING INSTALLATION
4) FREEZE PROTECTION IS THE RESPONSIBILITY OF THE OWNER.
5) A MIN. 3" DIA. FLOOR DRAIN IS REQUIRED.
6) A LADDER IS REQUIRED IF ACCESS OPENING TO FLOOR EXCEEDS 36''

AUGUST 8, 2013

BENTON CITY

DOUBLE CHECK
VALVE ASSEMBLY

DWG #
4-19

S:BCGEN/DETAILS/4-19 DCVA.DWG

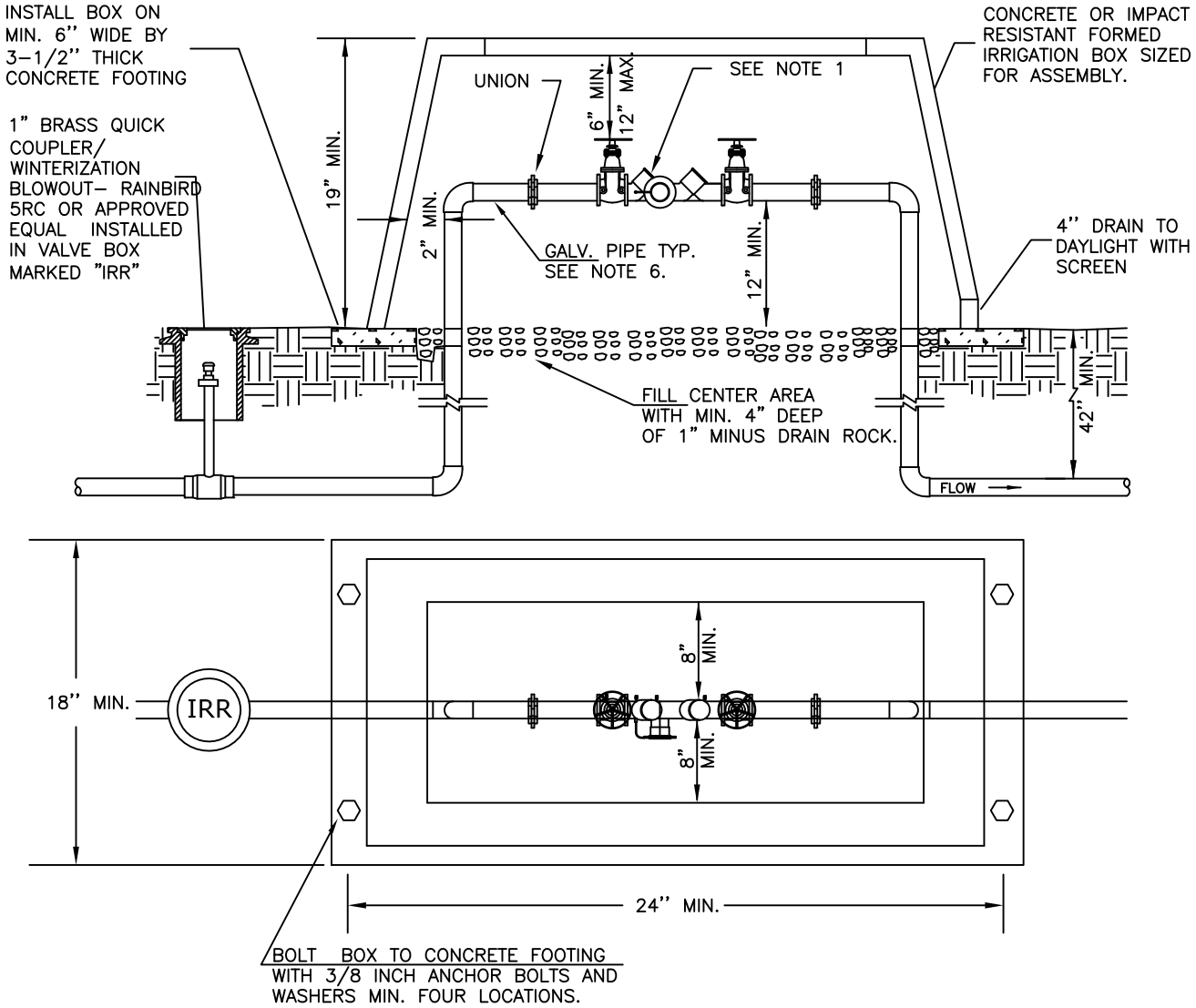

RPBA INSTALLATION

REDUCED PRESSURE BACKFLOW ASSEMBLY
FOR ASSEMBLIES 3/4" TO 1"

NOTES:

1) MUST BE ON THE LATEST DEPT. OF HEALTH APPROVED LIST OF BACKFLOW PREVENTION ASSEMBLIES.
2) MUST BE INSTALLED ABOVE GROUND MIN. 12 INCHES.
3) A CITY OF BENTON CITY CROSS CONNECTION SPECIALIST MUST BE PRESENT DURING INSTALLATION.
4) WHEN INSTALLED INSIDE A BUILDING, A FLOOR DRAIN SIZED TO ACCEPT MAXIMUM DISCHARGE FROM THE RELIEF ASSEMBLY IS REQUIRED.
5) FREEZE PROTECTION IS THE RESPONSIBILITY OF THE OWNER.
6) RISERS AND ALL PIPE IN BOX TO BE GALVANIZED STEEL OR MINIMUM SCH. 40 PVC.

AUGUST 8, 2013

BENTON CITY

REDUCED PRESSURE BACKFLOW ASSEMBLY

DWG # 4-20

SHEET 1 OF 2

S:BCGEN/DETAILS/4-20-1 RPBA.DWG

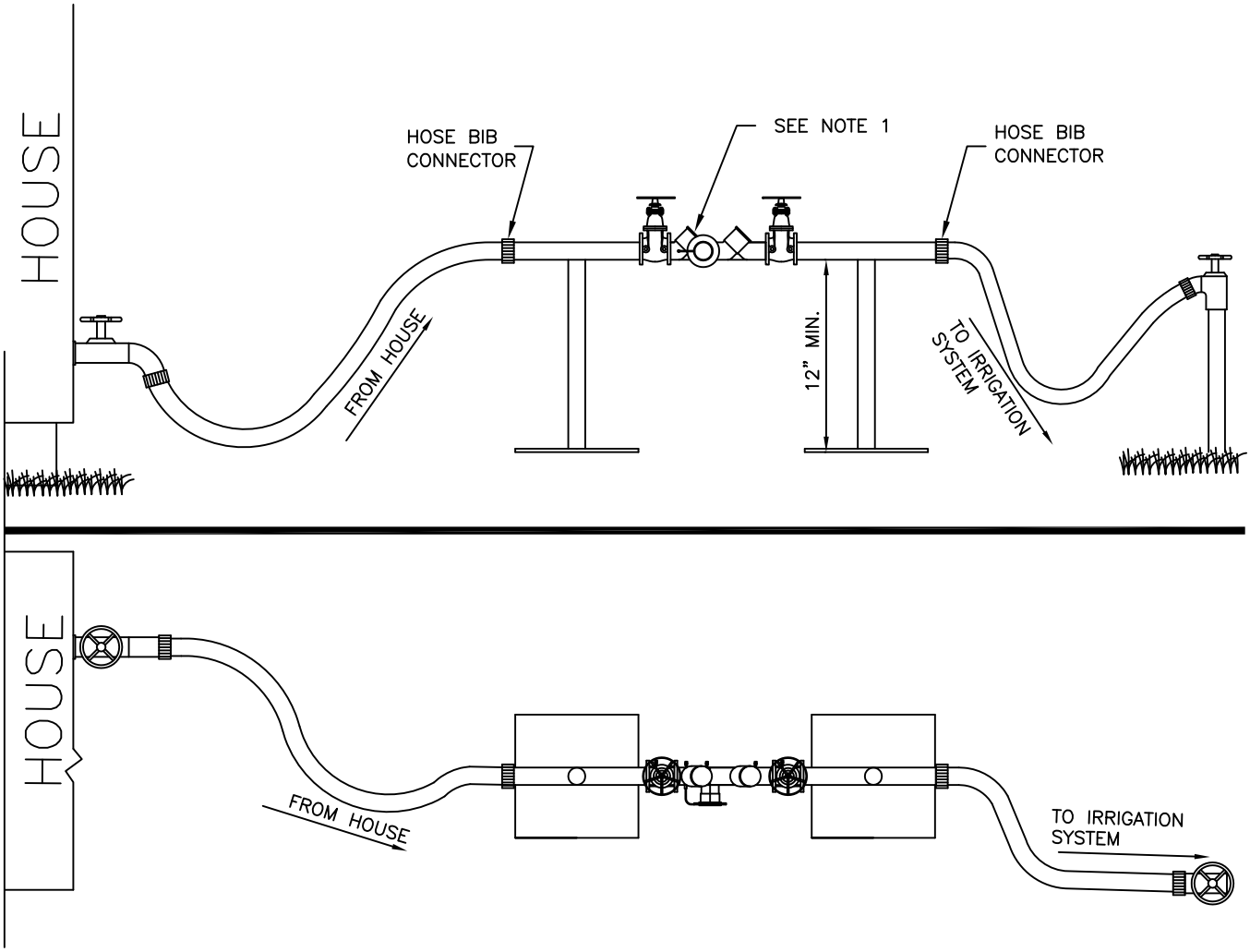

ALTERNATE RPBA INSTALLATION

REDUCED PRESSURE BACKFLOW ASSEMBLY
FOR ASSEMBLIES 3/4" TO 1"

NOTES:

1) MUST BE ON THE LATEST DEPT. OF HEALTH APPROVED LIST OF BACKFLOW PREVENTION ASSEMBLIES.
2) MUST BE INSTALLED ABOVE GROUND MIN. 12 INCHES.
3) A CITY OF BENTON CITY CROSS CONNECTION SPECIALIST MUST TEST ASSEMBLY UPON COMPLETION OF INSTALLATION.
4) WHEN INSTALLED INSIDE A BUILDING, A FLOOR DRAIN SIZED TO ACCEPT MAXIMUM DISCHARGE FROM THE RELIEF ASSEMBLY IS REQUIRED.
5) FREEZE PROTECTION IS THE RESPONSIBILITY OF THE OWNER.

AUGUST 8, 2013

BENTON CITY

REDUCED PRESSURE BACKFLOW ASSEMBLY

DWG # 4-20

SHEET 2 OF 2

S:BCGEN/DETAILS/4-20-2 RPBA.DWG

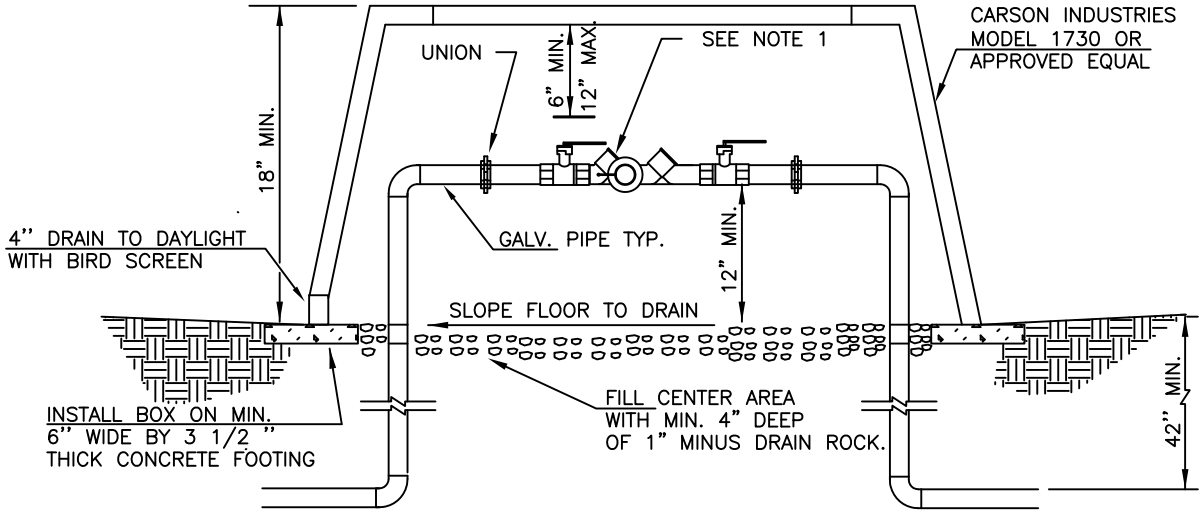

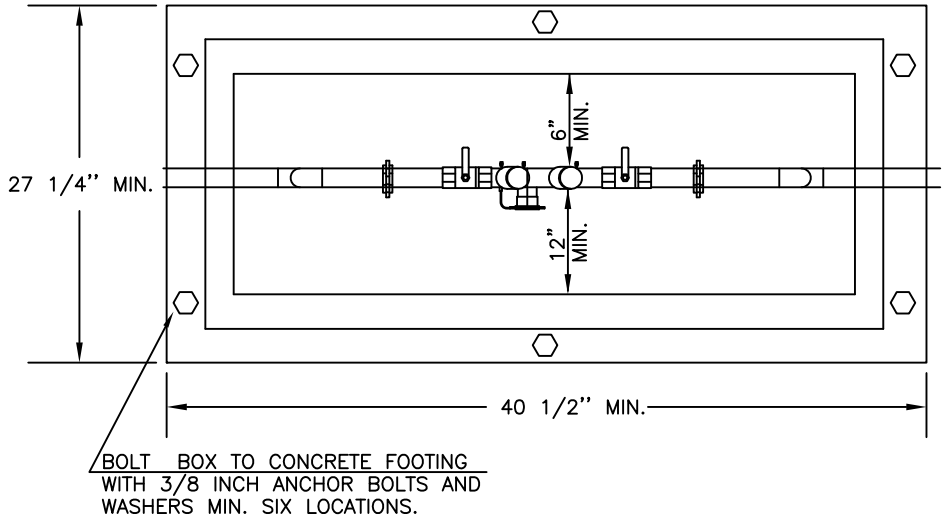

RPBA INSTALLATION

REDUCED PRESSURE BACKFLOW ASSEMBLY
FOR ASSEMBLIES 1 1/4" TO 2"

NOTES:

1) MUST BE ON THE LATEST DEPT. OF HEALTH APPROVED LIST OF BACKFLOW PREVENTION ASSEMBLIES.
2) MUST BE INSTALLED ABOVE GROUND MIN. 12 INCHES.
3) A CITY OF BENTON CITY CROSS CONNECTION SPECIALIST MUST BE PRESENT DURING INSTALLATION.
4) WHEN INSTALLED INSIDE A BUILDING, A FLOOR DRAIN SIZED TO ACCEPT MAXIMUM DISCHARGE FROM THE RELIEF ASSEMBLY IS REQUIRED.
5) FREEZE PROTECTION IS THE RESPONSIBILITY OF THE OWNER.

AUGUST 8, 2013

BENTON CITY

REDUCED PRESSURE
BACKFLOW ASSEMBLY

DWG #
4-21

S:BCGEN/DETAILS/4-21 RPBA.DWG

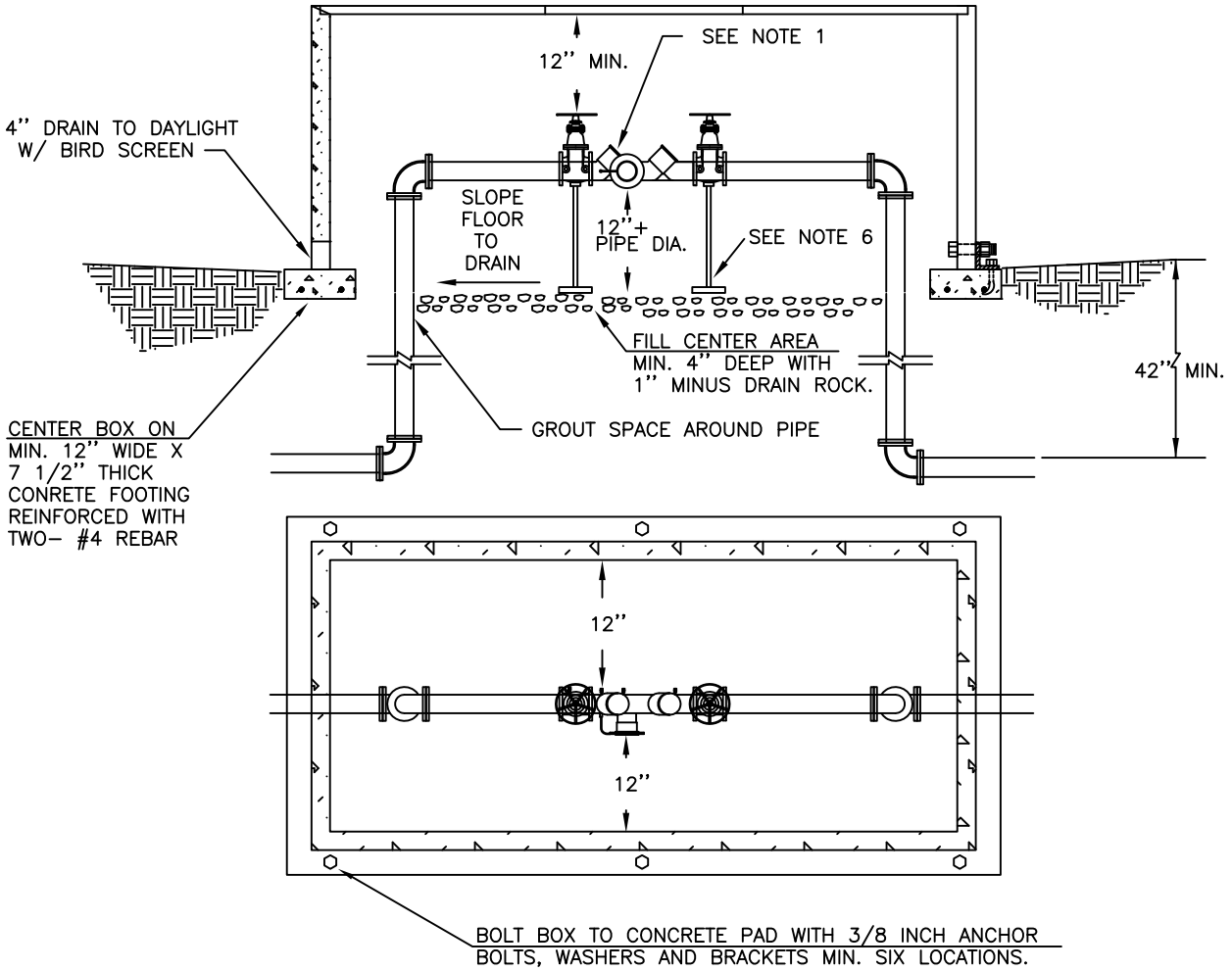

RPBA INSTALLATION

REDUCED PRESSURE BACKFLOW ASSEMBLY
FOR ASSEMBLIES 2 1/2'' AND LARGER

NOTES:

1) MUST BE ON THE LATEST DEPT. OF HEALTH APPROVED LIST OF BACKFLOW PREVENTION ASSEMBLIES.
2) MUST BE INSTALLED ABOVE GROUND. MIN. 12'' PLUS PIPE DIAMETER.
3) A CITY OF BENTON CITY CROSS CONNECTION SPECIALIST MUST BE PRESENT DURING INSTALLATION.
4) WHEN INSTALLED INSIDE A BUILDING, A FLOOR DRAIN SIZED TO ACCEPT MAXIMUM DISCHARGE FROM THE RELIEF ASSEMBLY IS REQUIRED.
5) FREEZE PROTECTION IS THE RESPONSIBILITY OF THE OWNER.
6) SEE DWG. 4-12 FOR PIPE SUPPORTS. SET SUPPORTS ON CONCRETE BLOCKS.

AUGUST 8, 2013

BENTON CITY

REDUCED PRESSURE
BACKFLOW ASSEMBLY

DWG #
4-22

S:BCGEN/DETAILS/4-22 RPBA.DWG

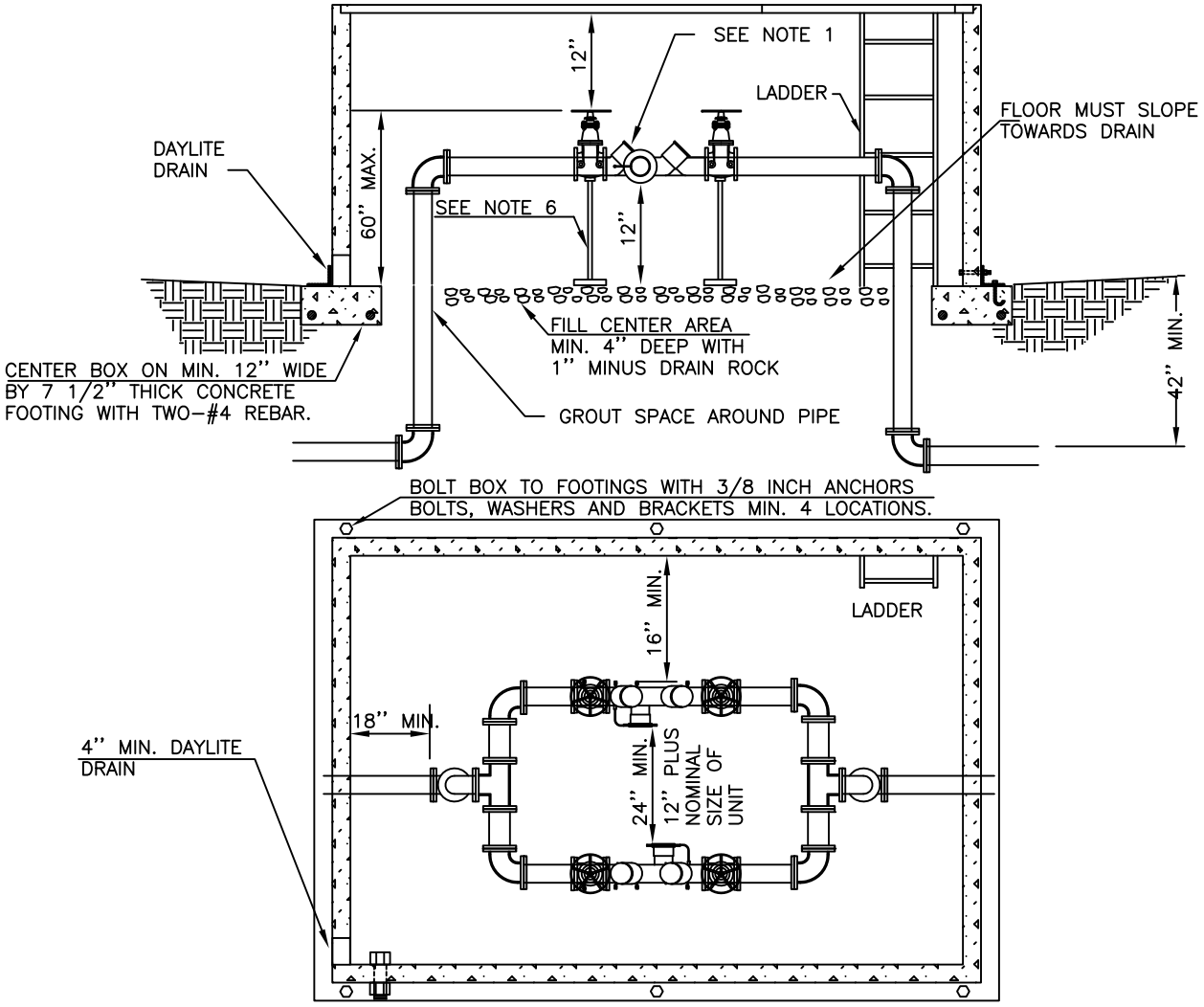

RPBA DUAL INSTALLATION

REDUCED PRESSURE BACKFLOW ASSEMBLY
FOR ASSEMBLIES 3'' AND LARGER

NOTES:

1) MUST BE ON THE LATEST DEPT. OF HEALTH APPROVED LIST OF BACKFLOW PREVENTION ASSEMBLIES.
2) MUST BE INSTALLED ABOVE GROUND.
3) A CITY OF BENTON CITY CROSS CONNECTION SPECIALIST MUST BE PRESENT DURING INSTALLATION.
4) WHEN INSTALLED INSIDE A BUILDING, A FLOOR DRAIN SIZED TO ACCEPT MAXIMUM DISCHARGE FROM BOTH RELIEF ASSEMBLIES IS REQUIRED.
5) FREEZE PROTECTION IS THE RESPONSIBILITY OF THE OWNER.
6) SEE DWG. 4-12 FOR PIPE SUPPORTS. SET SUPPORTS ON CONCRETE BLOCKS.

AUGUST 8, 2013

BENTON CITY

REDUCED PRESSURE BACKFLOW ASSEMBLY

DWG # 4-23

S:BCGEN/DETAILS/4-23 RPBA.DWG

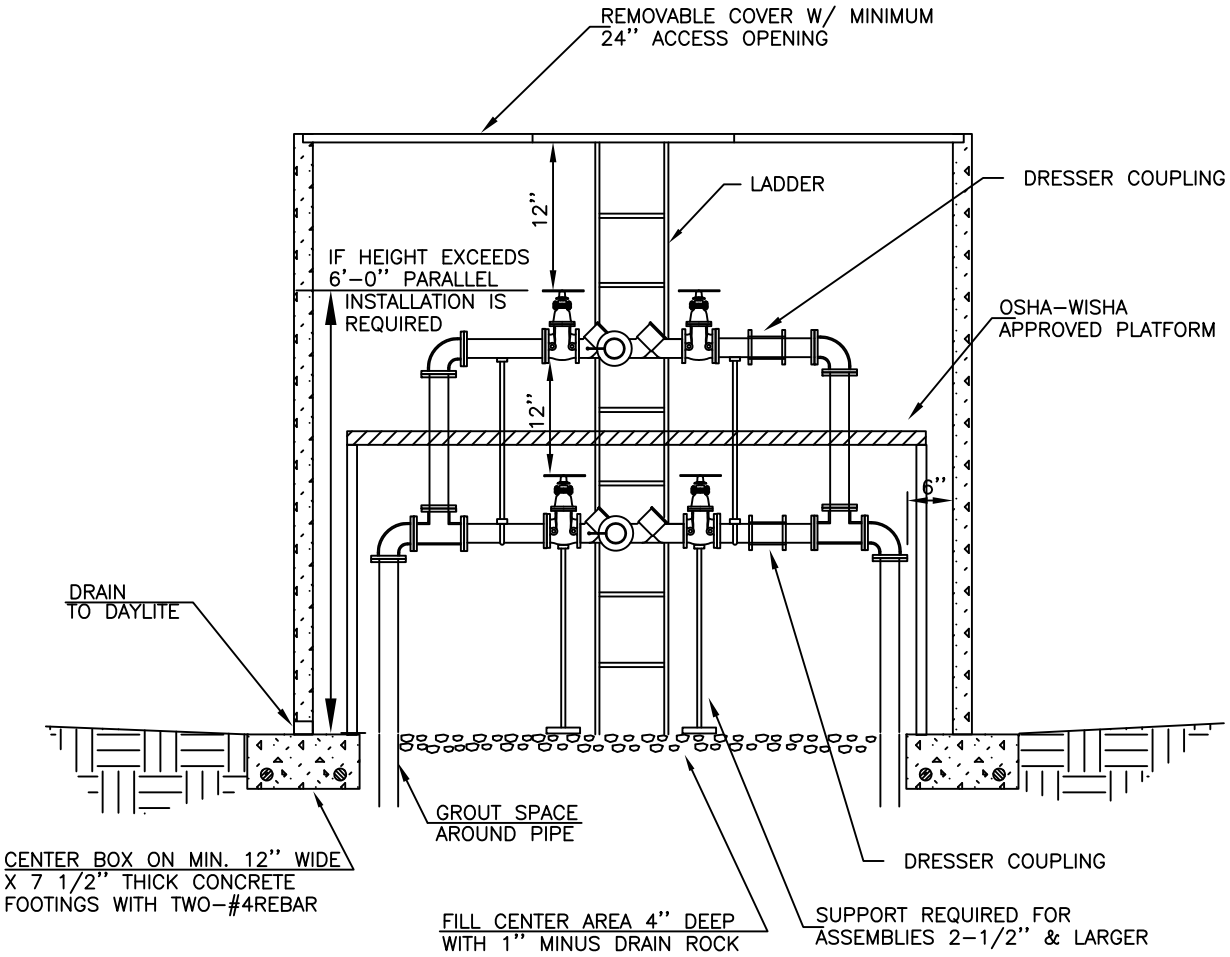

RPBA DUAL INSTALLATION

REDUCED PRESSURE BACKFLOW ASSEMBLY
REQUIRED FOR CONTINUOUS PROTECTION

NOTES:

1) MUST BE ON THE LATEST DEPT. OF HEALTH APPROVED LIST OF BACKFLOW PREVENTION ASSEMBLIES.
2) MUST BE INSTALLED ABOVE GROUND.
3) A CITY OF BENTON CITY CROSS CONNECTION SPECIALIST MUST BE PRESENT DURING INSTALLATION.
4) WHEN INSTALLED INSIDE A BUILDING, A FLOOR DRAIN SIZED TO ACCEPT DISCHARGE FROM BOTH ASSEMBLIES IS REQUIRED.
5) FREEZE PROTECTION IS THE RESPONSIBILITY OF THE OWNER.
6) SUFFICIENT CLEARANCE IS REQUIRED FROM THE TOP OF THE VALVE STEM WHEN FULLY OPEN TO THE BOTTOM OF THE TOP ASSEMBLY.
7) AN OSHA-WISHA APPROVED PLATFORM MUST BE ERECTED FOR MAINTENANCE AND TESTING.
8) GUARD POSTS ARE REQUIRED IN AREAS WHERE FORK LIFTS ARE USED (CITY OF BENTON CITY STANDARD DWG. 4-4 SHEET 2).

AUGUST 8, 2013

BENTON CITY

REDUCED PRESSURE
BACKFLOW ASSEMBLY

DWG #
4-24

S:BCGEN/DETAILS/4-24 RPBA.DWG

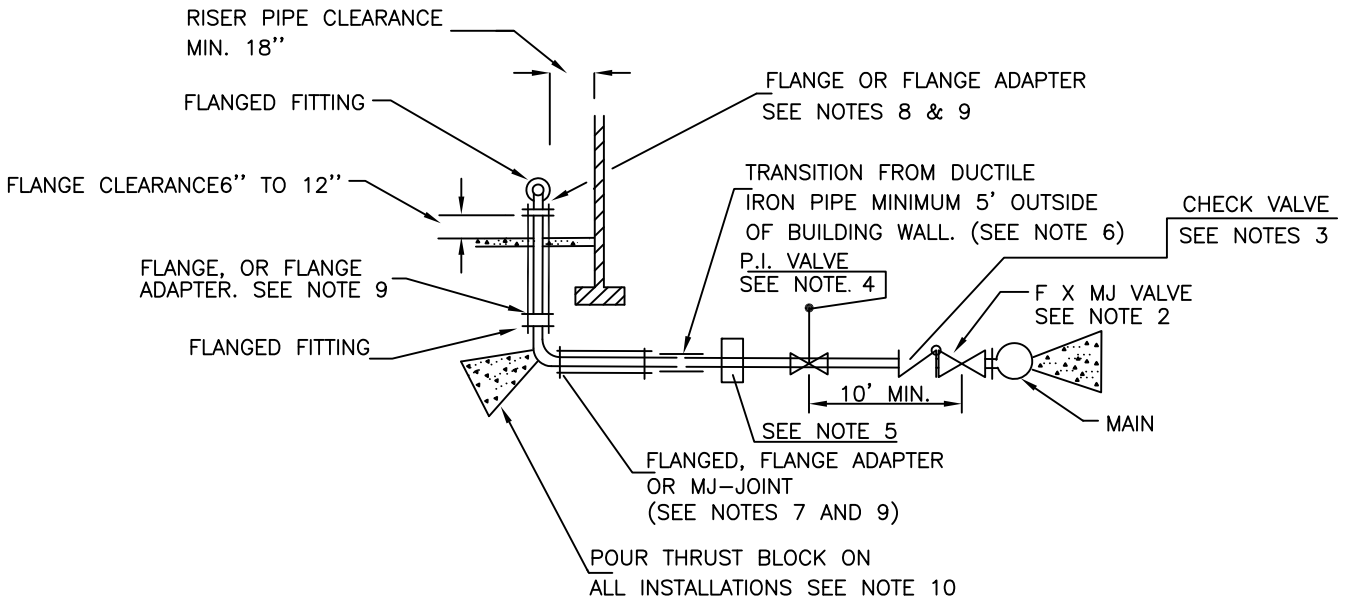

NOTES:

1. ENGINEERING INSPECTOR WILL INSPECT TO THE BACK FLOW DEVICE OUTSIDE OF THE BUILDING, OR TO THE FLANGE ABOVE THE BUILDING FLOOR.
2. CITY STANDARD VALVE AND VALVE BOX REQUIRED AT CONNECTION TO CITY MAIN LINE. CITY ENGINEER MAY DELETE MAINLINE VALVE WHEN DISTANCE TO THE BUILDING IS LESS THAN 15 FEET.
3. A SINGLE SOFT SEAT CHECK VALVE IS REQUIRED WHEN THE DISTANCE (PIPE LENGTH) FROM THE CITY WATER MAIN TO THE FLANGE ABOVE THE FLOOR IS GREATER THAN 50 FEET, EXCEPT THAT THE SOFT SEAT CHECK VALVE MAY BE DELETED IF THE STATE APPROVED BACK FLOW PREVENTION ASSEMBLY IS LOCATED BETWEEN THE CITY WATER MAIN AND THE BUILDING AND IS WITHIN 50 FEET OF THE CITY WATER MAIN.
4. FIRE DEPT. APPROVED POST INDICATOR (P.I.) VALVE REQUIRED A MINIMUM OF 10 FEET FROM THE CITY MAIN LINE ISOLATION VALVE.
5. APPROVED BACK FLOW PREVENTION ASSEMBLY REQUIRED (LOCATION VARIES: SEE STD. DWG.'S 4-12 THROUGH 4-24)
6. FITTINGS AND PIPE WITHIN THE BUILDING LIMITS, AND TO A MINIMUM 5 FEET OUTSIDE OF THE BUILDING, SHALL BE AWWA CAST OR DUCTILE IRON, AS SPECIFIED IN SECTION 4 OF THE CITY SPECIFICATIONS.
7. JOINT TO BE FLANGED, OR FLANGE ADAPTER, EXCEPT MJ JOINT MAY BE USED WHEN BEND IS SHACKLED TO A RETAINER GLAND LOCATED A MINIMUM OF 5 FEET OUTSIDE OF THE BUILDING.
8. ALTERNATE MJ FITTING MAY BE USED PROVIDED THAT 250 PSI RATED STEEL TIE RODS ARE UTILIZED TO BELOW FLOOR FITTING. USE 2 RODS FOR 4"-6" PIPE, 3 RODS FOR 8", AND 4 RODS FOR 10"+. FOLLOWING ASSEMBLY, COAT ALL ROD ASSEMBLIES WITH BITUMASTIC SEALANT.
9. FLANGE ADAPTER TO BE 250 PSI RATED DUCTILE OR CAST IRON "UNION FLANGE" AS MFG. BY UNION FOUNDRY CO., UNIFLANGE OR EQUAL.
10. CONSTRUCT A THRUST BLOCK ON THE 90° BEND UNDER THE FLOOR SIZED FOR THE SIZE OF PIPE AND TYPE OF FILL. SIZE TO BE 1.34 TIMES THAT CALLED FOR IN STD. DWG. 4-6.
11. PRESSURE TEST ALL FIRE LINE INSTALLATIONS AT 200 PSI FOR 2 HOURS, PER THE REQUIREMENTS OF SECTION 4-1.08.01 OF THESE SPECIFICATIONS.
12. CONTRACTOR TO PROVIDE PITOT TUBE FOR MEASURING FLOW DURING FLUSHING, IF A REDUCED SIZE FLUSH PIPE IS USED. THE CONTRACTOR IS RESPONSIBLE TO CONTROL ALL FLUSH WATER.

AUGUST 8, 2013

BENTON CITY

FIRE LINE (INTO BUILDING)

DWG # 4-25

S:BCGEN/DETAILS/4-25 FIRE LINE.DWG

PLAN VIEW

SEE SHEET 2 FOR PROFILE VIEW

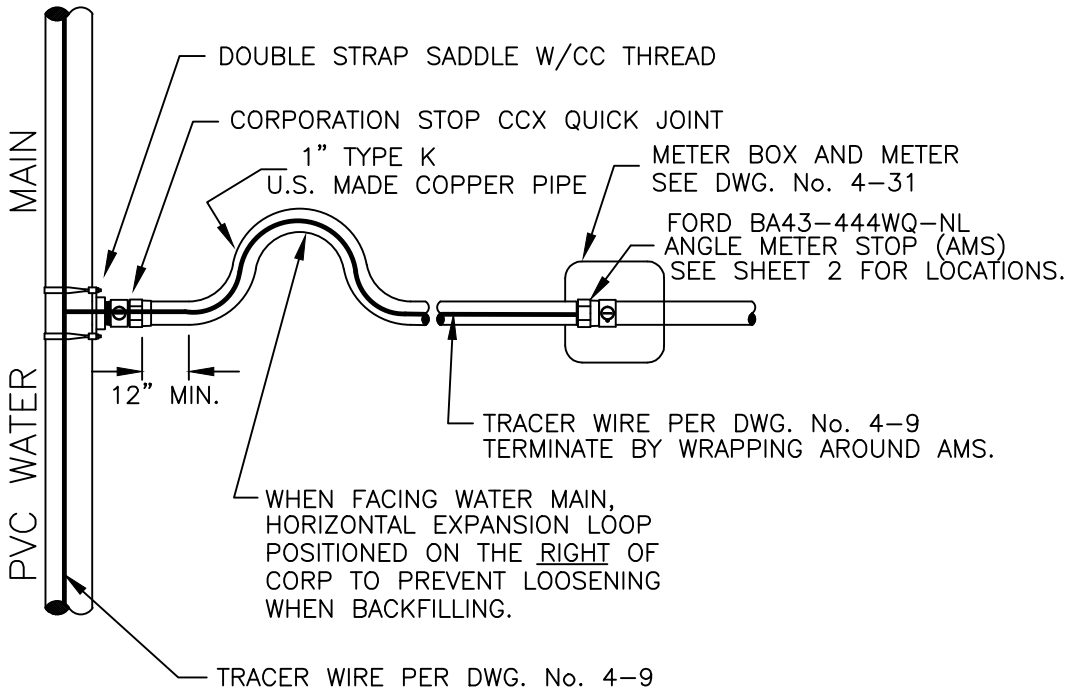

NOTES:

1. MINIMUM SERVICE PIPE SIZE IS 1 INCH.
2. SEE SECTION 4-3 FOR MATERIAL SPECIFICATIONS AND SHEET 2 FOR ADDITIONAL INSTALLATION REQUIREMENTS
3. ALL BENDS TO BE A MINIMUM OF ONE FOOT FROM ALL SERVICE LINE FITTINGS.

MAY 5, 2015

BENTON CITY

1" WATER SERVICE FROM PVC WATER MAIN

DWG # 4-26

SHEET 1 OF 2

S:\4-AutoCAD Drawings\BENTON CITY GENERAL\STD DETAILS\4-26-1 1 INCH WA SERVICE.dwg

PROFILE VIEW

SEE SHEET 1 FOR PLAN VIEW

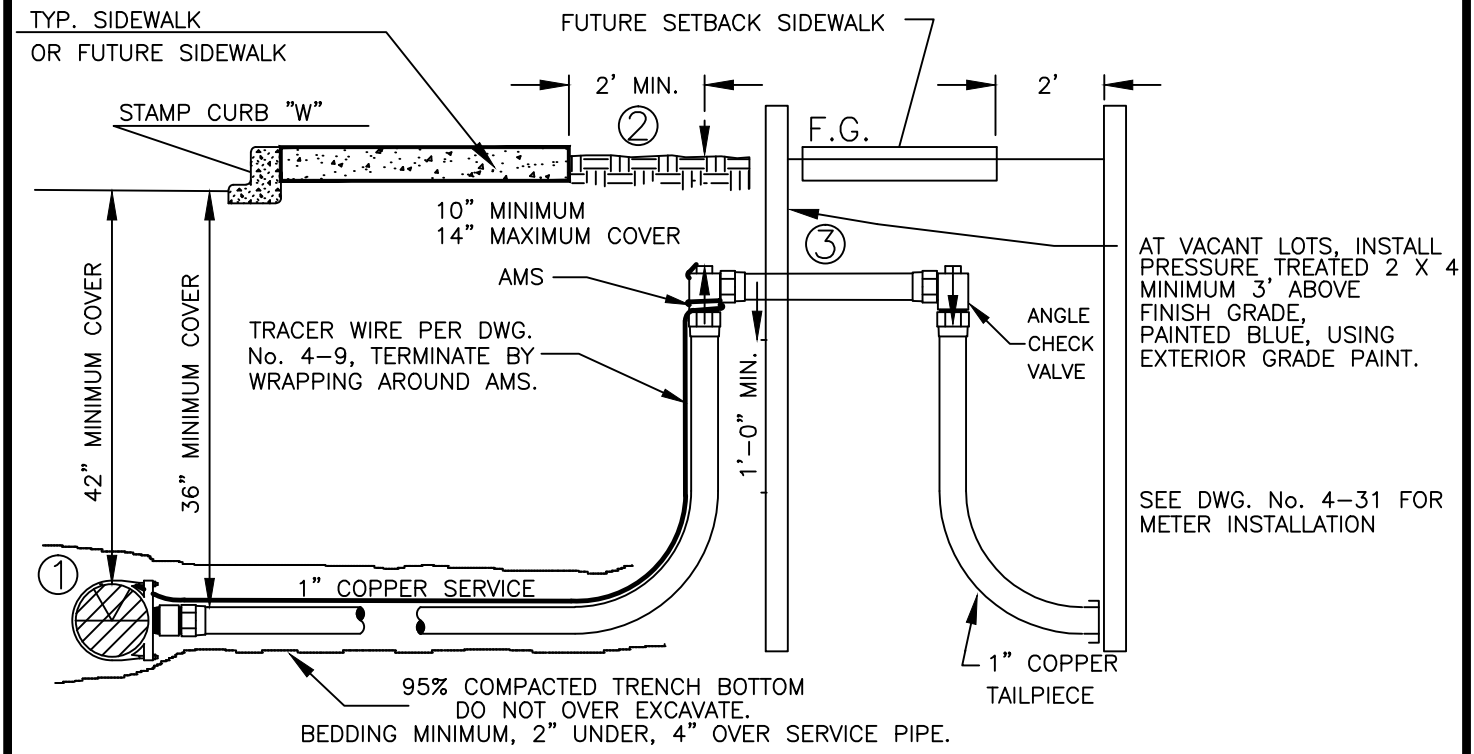

NOTES:

1. TAP AT HORIZONTAL FOR P.V.C. PIPE. SEE DWG 4-28 FOR SERVICE FROM D.I., STEEL AND A.C. MAINS

2. FOR FUTURE SETBACK SIDEWALK WITH PLANTER STRIP, AMS WILL BE 2' BEHIND BACK OF CURB. SEE NOTE 3.

3. WHEN WALK WILL BE SET BACK FROM CURB WITH PLANTER STRIP, SET AMS 2' FROM BACK OF CURB AND INSTALL 11"X1" THREADED METER SPACER (LENGTH INCLUDES THREADS), TAILPIECE PER DWG 4-31 AND EXTEND SERVICE TO 2' BEYOND FUTURE SIDEWALK, CAP AND MARK.

MAY 5, 2015

BENTON CITY

1" WATER SERVICE FROM PVC WATER MAIN

DWG # 4-26

SHEET 2 OF 2

S:\4-AutoCAD Drawings\BENTON CITY GENERAL\STD DETAILS\4-26-2 1 INCH WA SERVICE.dwg

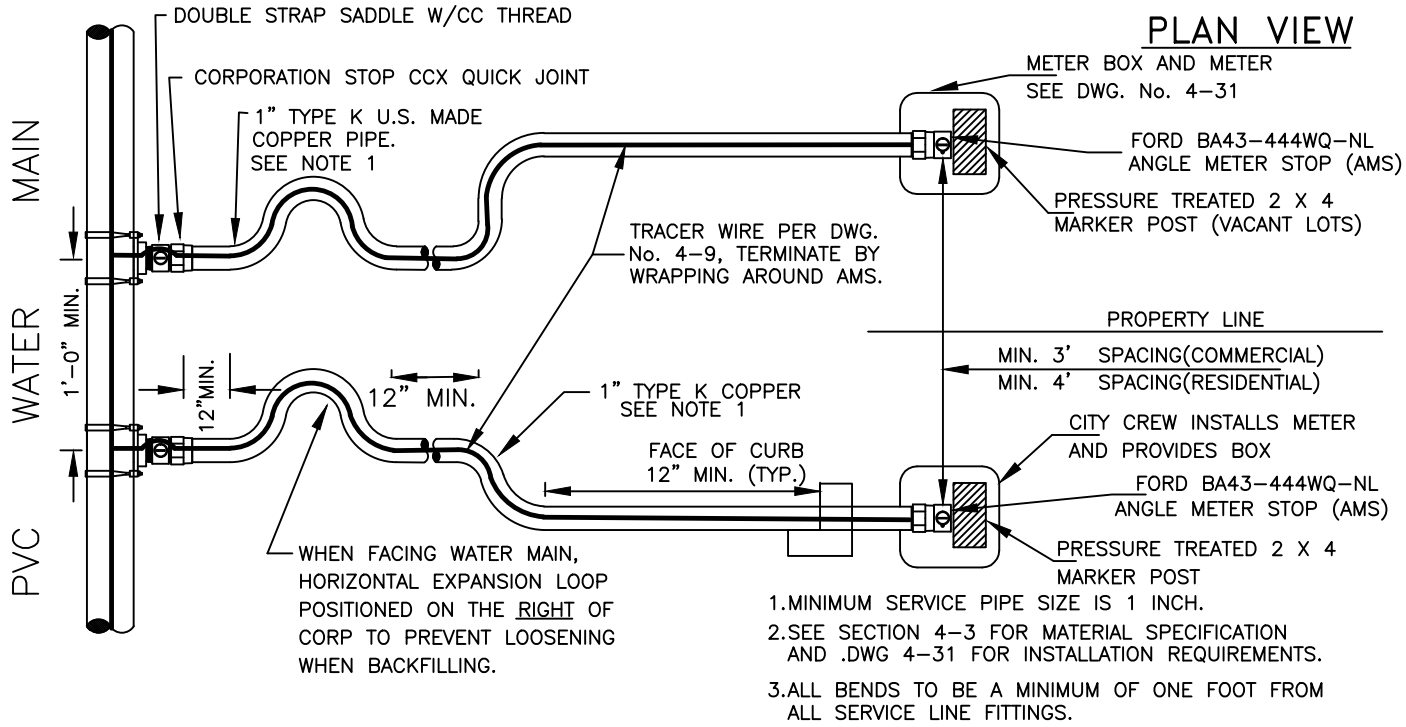

1. MINIMUM SERVICE PIPE SIZE IS 1 INCH.
2. SEE SECTION 4-3 FOR MATERIAL SPECIFICATION AND .DWG 4-31 FOR INSTALLATION REQUIREMENTS.
3. ALL BENDS TO BE A MINIMUM OF ONE FOOT FROM ALL SERVICE LINE FITTINGS.

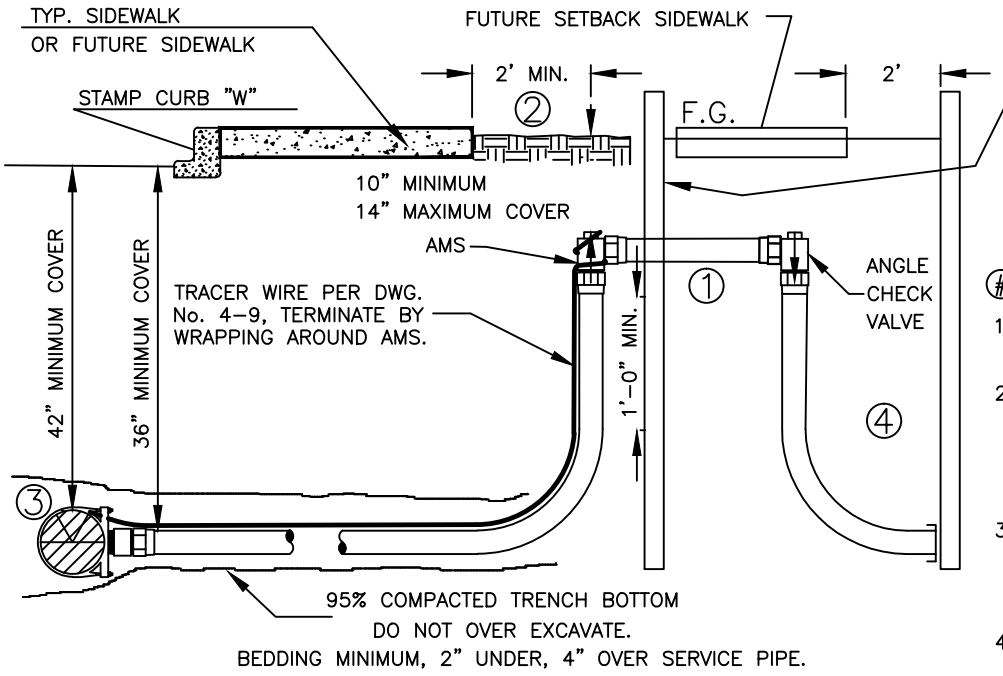

AT VACANT LOTS, INSTALL PRESSURE TREATED 2 X 4 MINIMUM 3' ABOVE FINISH GRADE, PAINTED BLUE, USING EXTERIOR GRADE PAINT.

(#) NOTES:

1. SEE DWG. No. 4-31 FOR METER INSTALLATION
2. INSTALL TAIL PIECE PER DWG 4-31, & SERVICE EXTENSION TO 2' BEYOND FUTURE SIDEWALK MARKER POST AT END PIPE.
3. TAP AT HORIZONTAL FOR P.V.C. PIPE. SEE DWG 4-29 FOR SERVICE FROM D.I., STEEL AND A.C. MAINS.
4. IF SIDEWALK WILL BE SET BACK, SEE STD DWG 4-26, SHEET 2, NOTE 3.

1" TAPS, REQUIRES TWO

MAY 5, 2015

BENTON CITY

DOUBLE WATER SERVICE FROM PVC WATER MAIN

DWG # 4-27

S:\4-AutoCAD Drawings\BENTON CITY GENERAL\STD DETAILS\4-27 DOUBLE WA SERVICE.dwg

PLAN VIEW

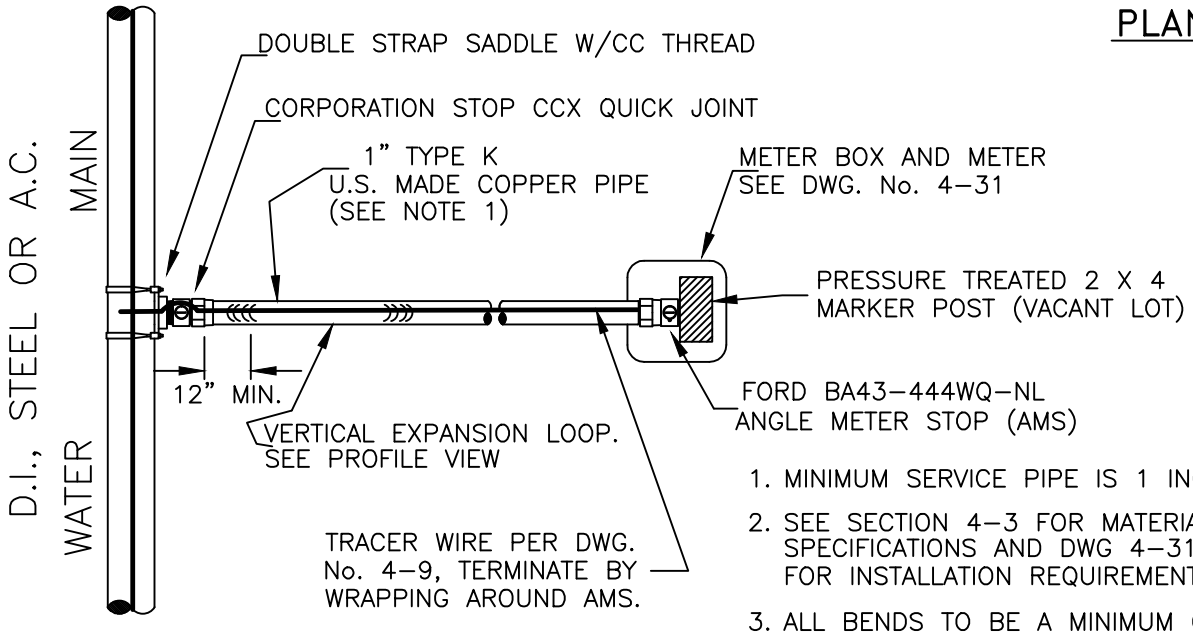

1. MINIMUM SERVICE PIPE IS 1 INCH.
2. SEE SECTION 4-3 FOR MATERIAL SPECIFICATIONS AND DWG 4-31 FOR INSTALLATION REQUIREMENTS.
3. ALL BENDS TO BE A MINIMUM OF ONE FOOT FROM ALL SERVICE LINE FITTINGS.

PROFILE VIEW

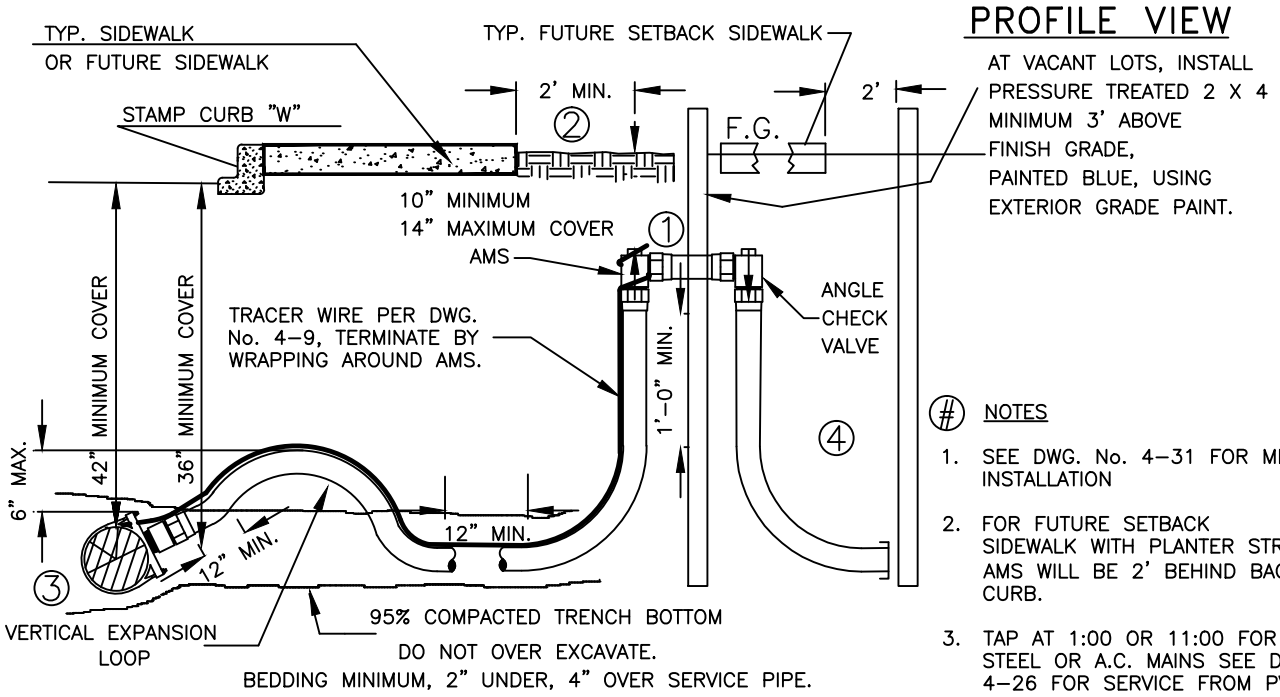

NOTES

1. SEE DWG. No. 4-31 FOR METER INSTALLATION
2. FOR FUTURE SETBACK SIDEWALK WITH PLANTER STRIP, AMS WILL BE 2' BEHIND BACK OF CURB.
3. TAP AT 1:00 OR 11:00 FOR D.I. STEEL OR A.C. MAINS SEE DWG 4-26 FOR SERVICE FROM PVC MAINS.
4. IF SIDEWALK WILL BE SET BACK, SEE STD DWG 4-26, SHEET 2, NOTE 3.

MAY 5, 2015

BENTON CITY

1" WATER SERVICE FROM D.I., STEEL & A.C. MAINS

DWG # 4-28

S:\4-AutoCAD Drawings\BENTON CITY GENERAL\STD DETAILS\4-28 WA SERVICE.dwg

PLAN VIEW

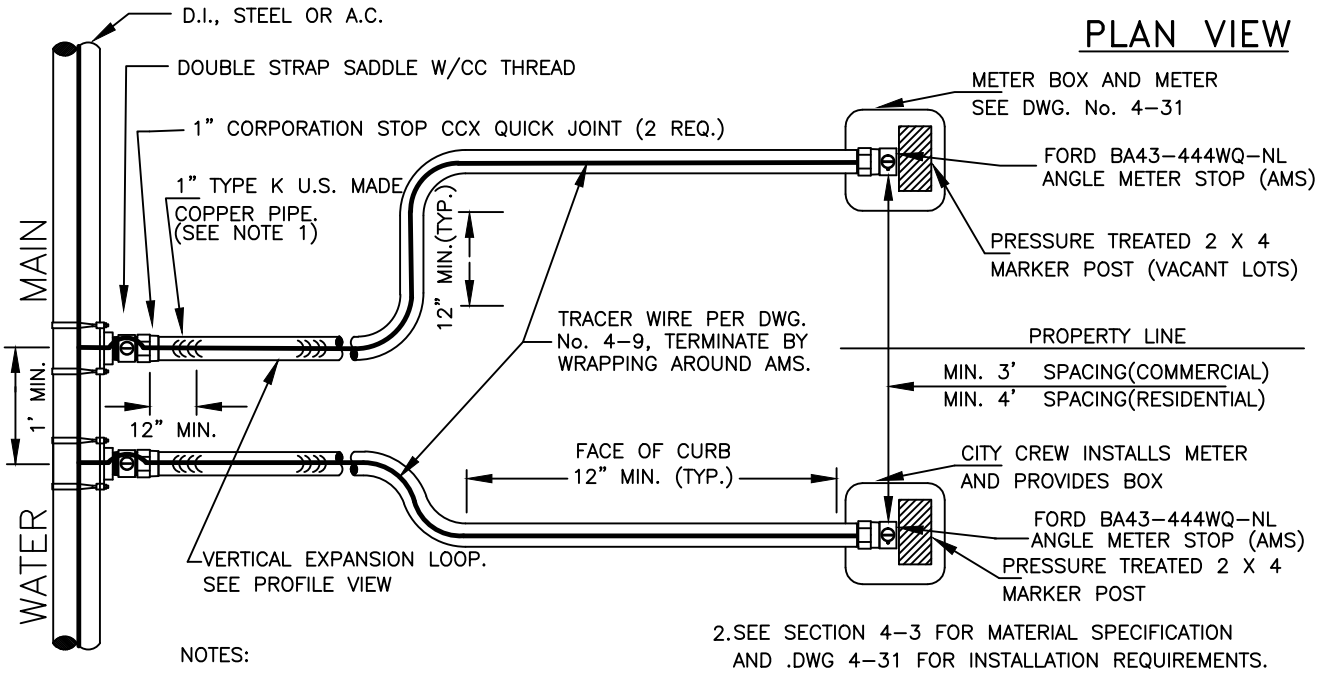

NOTES:

1. MINIMUM SERVICE PIPE SIZE IS 1 INCH
2. SEE SECTION 4-3 FOR MATERIAL SPECIFICATION AND .DWG 4-31 FOR INSTALLATION REQUIREMENTS.
3. ALL BENDS TO BE A MINIMUM OF ONE FOOT FROM ALL SERVICE LINE FITTINGS.

PROFILE VIEW

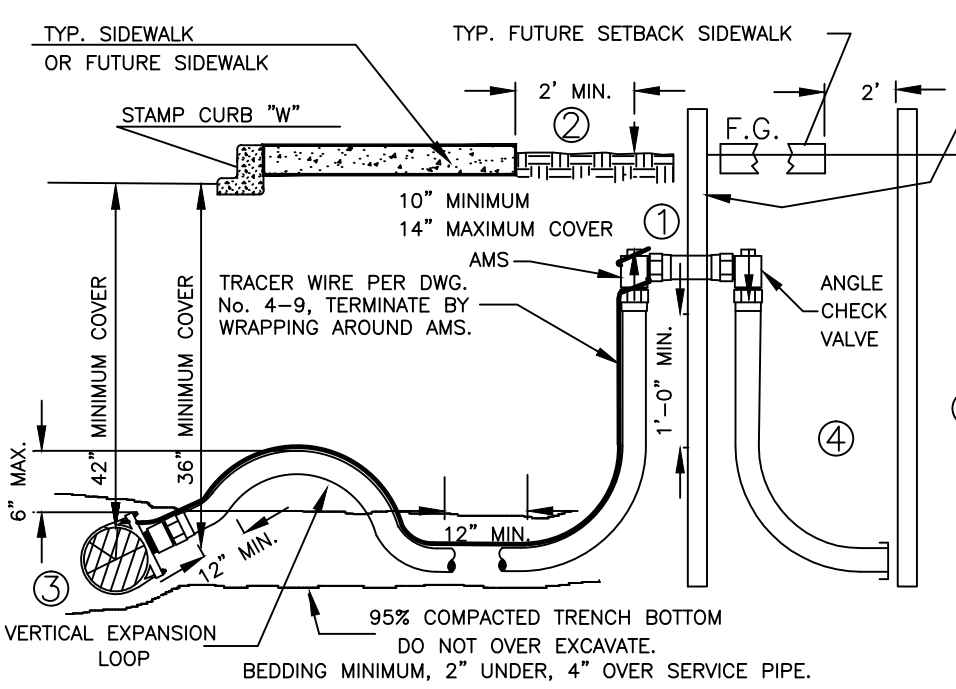

AT VACANT LOTS, INSTALL PRESSURE TREATED 2 X 4 MINIMUM 3' ABOVE FINISH GRADE, PAINTED BLUE, USING EXTERIOR GRADE PAINT.

(#) NOTES:

1. SEE DWG. No. 4-31 FOR METER INSTALLATION
2. FOR FUTURE SETBACK SIDEWALK WITH PLANTER STRIP, AMS WILL BE 2' BEHIND BACK OF CURB.
3. TAP AT 1:00 OR 11:00 FOR D.I. STEEL OR A.C. MAINS SEE DWG 4-26 FOR SERVICE FROM PVC MAINS.
4. IF SIDEWALK WILL BE SET BACK, SEE STD DWG 4-26, SHEET 2, NOTE 3.

MAY 5, 2015

BENTON CITY

1" DOUBLE WATER SERVICE FROM D.I., STEEL & A.C. MAINS

DWG # 4-29

S:\4-AutoCAD Drawings\BENTON CITY GENERAL\STD DETAILS\4-29 WA SERVICE.dwg

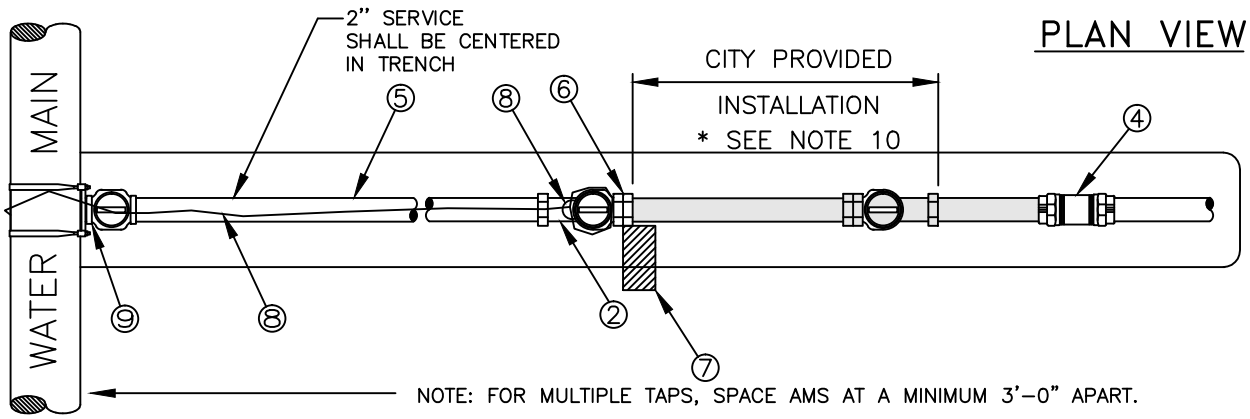

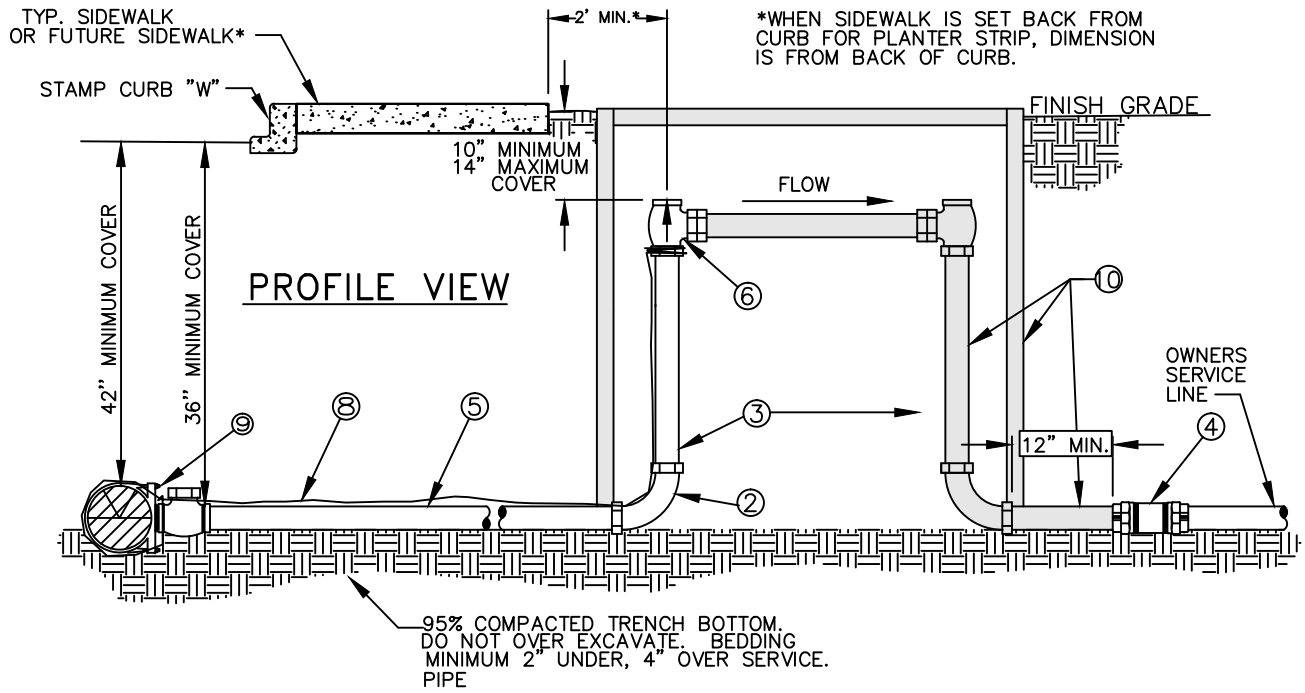

METER ASSEMBLY MATERIALS

1. METER BOX– CITY SUPPLIED
2. 2" X 90° COMPRESSION ELL
3. 2" TYPE "K" COPPER TUBING
4. 2" COMPRESSION COUPLING, REDUCER AS REQUIRED, DIELECTRIC UNION IF SERVICE IS GALVANIZED.
5. 2" POLYETHYLENE PIPE
6. 2" ANGLE METER STOP, QUARTER TURN (FORD BFA43–777WQ–NL). IF IN PLANTER STRIP AT BACK OF CURB, INSTALL 17 1/4" SPACER (FLG TO FLG) FOR FUTURE METER BY CITY CREWS.
7. CONTRACTOR TO INSTALL GROUND CONTACT PRESSURE TREATED 2"x4"x6' MARKER POST. SET TOP 3' ABOVE FINISH GRADE, PAINTED BLUE, USING EXTERIOR GRADE PAINT.
8. LOCATE WIRE– CONNECT TO METALLIC MAIN LINE OR MAIN LINE LOCATE WIRE AND TERMINATE BY WRAPPING AROUND AMS.
9. 2" DOUBLE STRAP, SADDLE & CORP. STOP, IRON PIPE THREAD X COMPRESSION TAP AT HORIZONTAL FOR ALL MAINLINE PIPE TYPES.
10. FOR COMMERCIAL PERMITS, THE CITY WATER DEPT. SUPPLIES AND INSTALLS THE METER BOXES & METERS AND TAIL PIECE AS PART OF THE PERMIT.

REQUIRED FOR 1 1/2" & 2" METER INSTALLATIONS
SEE SECTION 4–3 FOR MATERIAL SPECIFICATIONS
AND INSTALLATION REQUIREMENTS

SEPTEMBER 2, 2015

BENTON CITY

2" WATER SERVICE

DWG # 4–30

S:\4–AutoCAD Drawings\BENTON CITY GENERAL\STD DETAILS\4–30 WA SERVICE.dwg

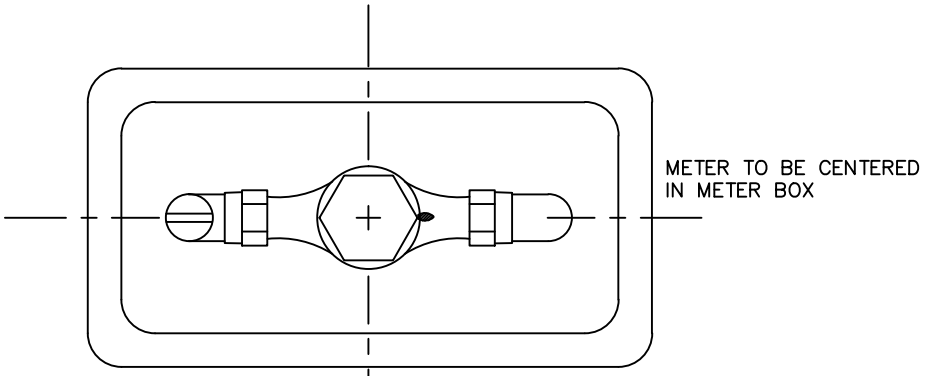

TOP VIEW

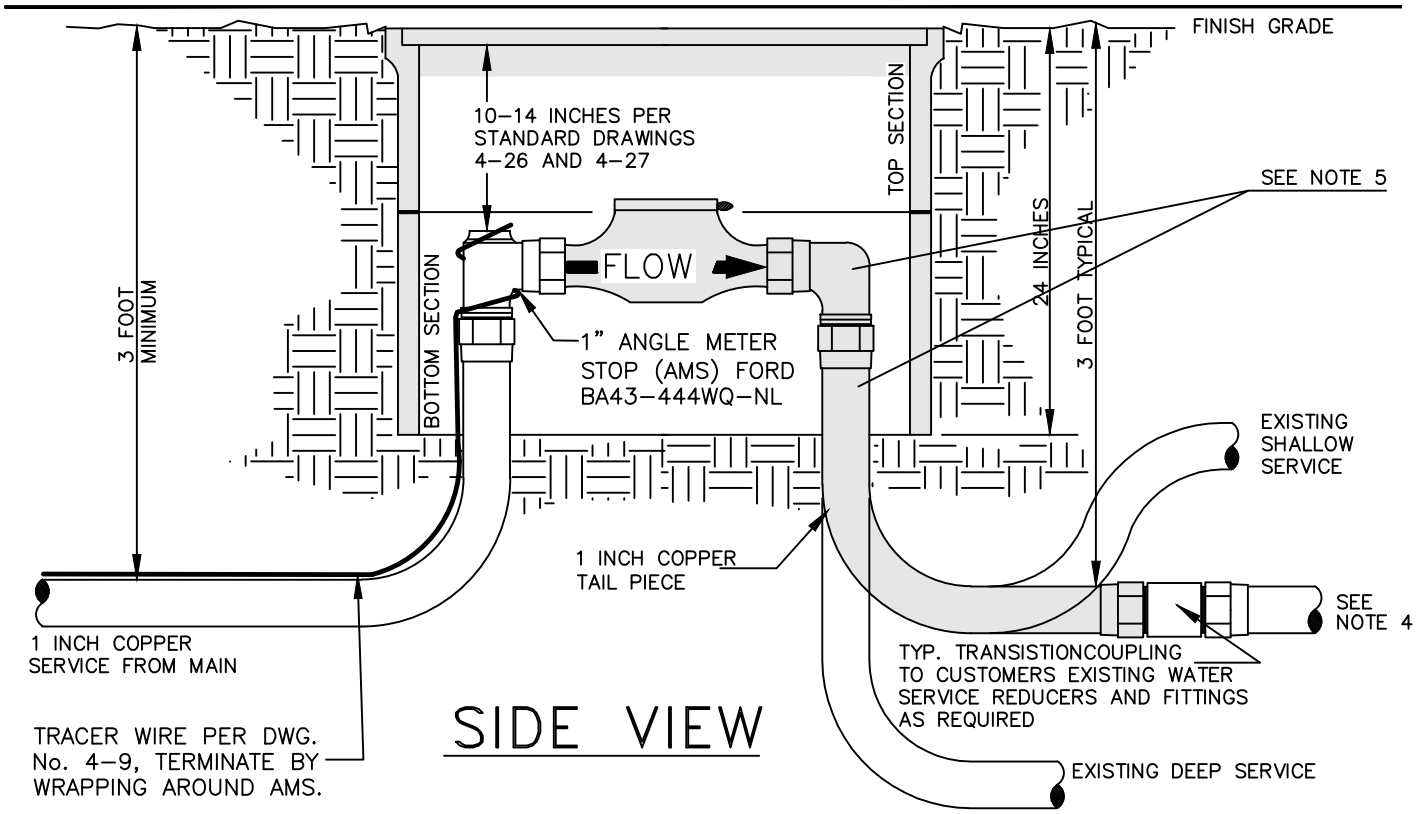

SIDE VIEW

NOTE:

1) BOTTOM SECTION TO BE ADJUSTED BY COMPACTING MATERIAL 24 INCHES BELOW THE SURFACE TO ALLOW TOP SECTION TO SET LEVEL WITH SURFACE.
2) NO ADJUSTMENT MATERIALS OR GROUT ALLOWED BETWEEN METER BOX SECTIONS.
3) SEE CITY STD SECTION 4–3 FOR MATERIAL SPECIFICATIONS AND INSTALLATION REQUIREMENTS. SPACE AMS A MINIMUM 3' APART (COMMERCIAL) AND A MINIMUM 4' APART (RESIDENTIAL).
4) WHERE THE EXISTING SERVICE IS GALVANIZED INSTALL DIELECTRIC UNION BETWEEN THE NEW COPPER AND GALVANIZED PIPES.
5) FOR NEW HOME CONNECTIONS AND ALL COMMERCIAL PERMITS, THE CITY WATER DEPT. SUPPLIES AND INSTALLS THE METER AND PROVIDES THE METER BOX. WHEN THE SIDEWALK IS LOCATED AT THE CURB. THE CITY WILL ALSO SUPPLY AND INSTALL THE TAIL PIECE, AS PART OF THE PERMIT.

SEPTEMBER 2, 2015

BENTON CITY

WATER METER INSTALLATION

DWG # 4–31

S:\4–AutoCAD Drawings\BENTON CITY GENERAL\STD DETAILS\4–31 WA METER.dwg

ELEVATION

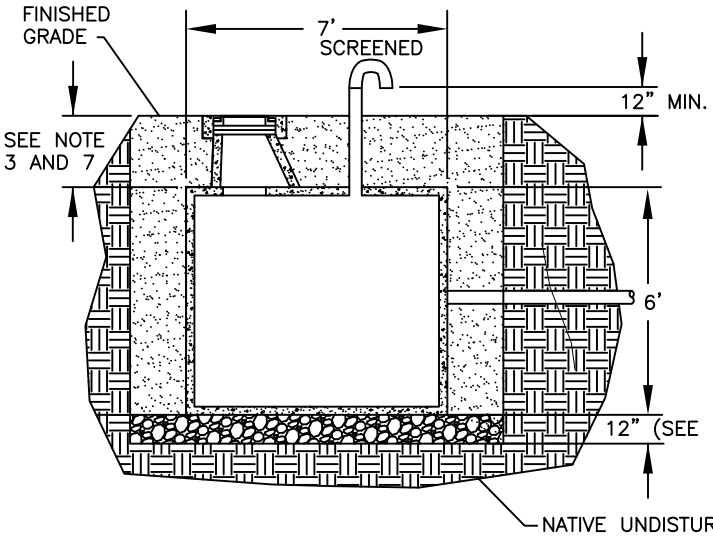

PLAN

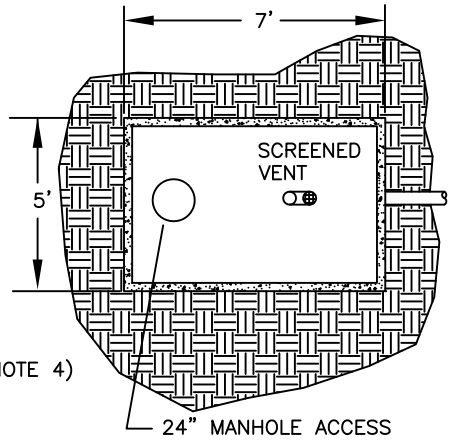

NOTES

1) THE CONTRACTOR SHALL CONTACT THE CITY INSPECTOR ASSIGNED TO THE PROJECT TO SET UP A MEETING WITH A REPRESENTATIVE OF THE CITY OF BENTON CITY WATER DEPT, CONTRACTOR AND CITY INSPECTOR PRIOR TO BEGINNING EXCAVATION OF THE VAULT HOLE AND TO SCHEDULE THE METER AND METER VAULT INSTALLATION.

2) EXCAVATION AREA FOR VAULT SHALL BE 10 FT. WIDE X 10 FT. LONG. WHERE LARGER VAULTS ARE REQUIRED, THE EXCAVATION SHALL BE PROPORTIONATELY EXTENDED.

3) THE VAULT SHALL HAVE A MINIMUM OF 18" INCHES OF COVER IN A PAVED AREA OR A MINIMUM OF OF 12 INCHES OF COVER IN LANDSCAPED AREA. ADDITIONAL EXCAVATION DEPTH MAY BE REQUIRED, IF THE BOTTOM OF THE EXCAVATED AREA IS LESS THAN 2 FT. BELOW THE BOTTOM OF THE EXISTING WATER MAIN THAT THE SERVICE LINE IS CONNECTED TO.

4) PLACE 12 INCHES OF WELL GRADED 1/2 IN. TO 1-1/2 IN. RIVER ROCK BELOW VAULT FOR BASE AND DRAINAGE.

5) THE CITY PROVIDES AND INSTALLS THE WATER SERVICE FROM THE VALVE TO THE METER VAULT, METER, VAULT, MANHOLE CASTING & LID, AND STUBS PIPES OUT OF THE METER VAULT.

6) THE CONTRACTOR IS RESPONSIBLE FOR TRENCH EXCAVATION AND BACKFILL, FINAL EXTENSIONS AND ADJUSTMENT OF MANHOLE CASTING AND LID, WHERE THE METER VAULT IS IN A GRASS OR LANDSCAPED AREA, THE CONTRACTOR SHALL EXTEND THE AIR VENT ON THE METER VAULT, TO <u>ONE FOOT ABOVE THE FINISHED GRADE</u> AND PROVIDE A STAINLESS OR GALVANIZED SCREEN AND CAP. ALL CLEANUP AND LANDSCAPE RESTORATION SHALL BE COMPLETED BY THE CONTRACTOR.

7) A MAXIMUM OF 24 INCHES OF ADJUSTMENT RINGS CAN BE USED TO MATCH FINISH GRADE. FOR DEEPER DEPTH INSTALLATIONS MANHOLE CONE AND ADJUSTMENT RINGS ARE REQUIRED.

AUGUST 8, 2013

BENTON CITY

3" OR LARGER METER VAULT INSTALLATION

DWG # 4-32

S:BCGEN/DETAILS/4-32 WA METER VAULT.DWG

CASING SPACER

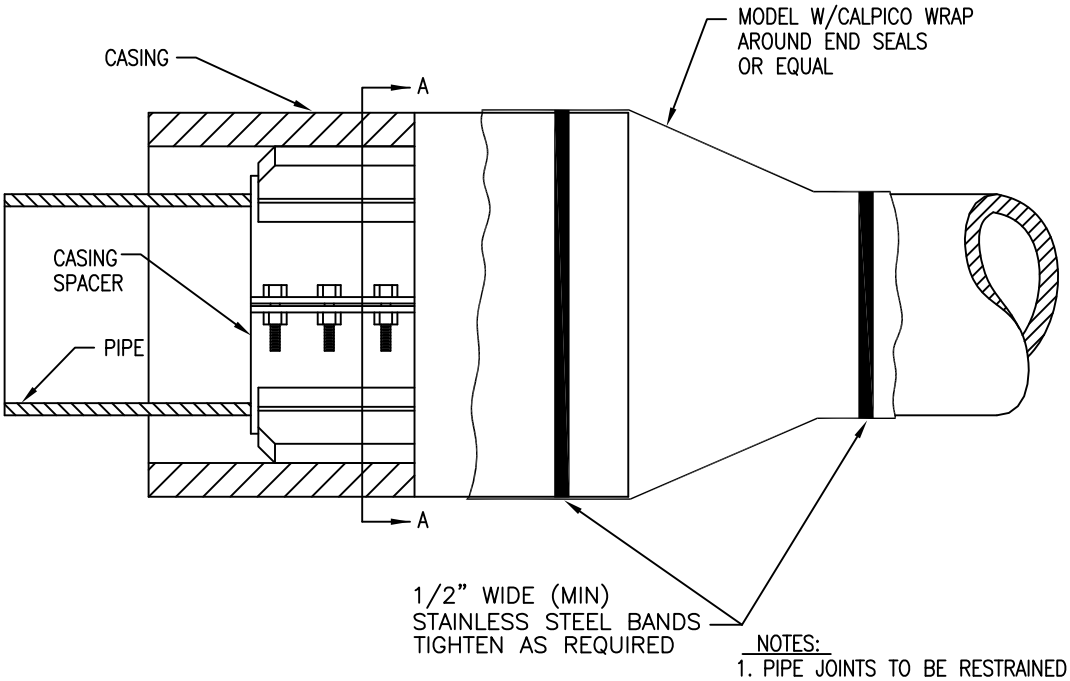

NOTES:

1. PIPE JOINTS TO BE RESTRAINED PER APPROVAL OF CITY ENGINEER.
2. FOR PIPES 12" & SMALLER, 2 SPACERS PER JOINT OF 13' SEWER, 4 SPACERS PER JOINT OF 18' OR 20' WATER
3. MINIMUM 3/8" STEEL. THICKER CASINGS MAY BE REQUIRED BY THE RAILROAD OR IRRIGATION UTILITY.

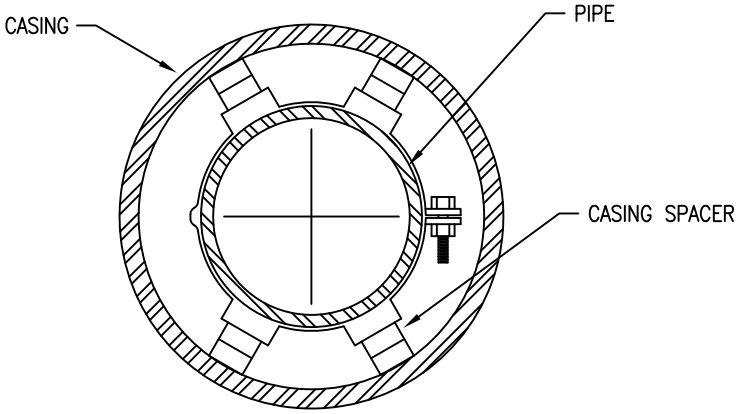

SECTION A–A

NOTES:

1. CASING SPACERS SHALL BE MANUFACTURED GALVANIZED, OR STAINLESS STEEL OR POLYETHYLENE, SIZED FOR THE TYPE OF PIPE & CASING SIZE.
2. CASING TO BE SIZED TO PROVIDE MINIMUM 2 INCH CLEAR FOR THE TYPE OF JOINT APPROVED BY THE CITY ENGINEER.
3. PIPE JOINTS WITHIN CASING TO BE RESTRAINED JOINT AS APPROVED BY THE ENGINEER.

AUGUST 8, 2013

BENTON CITY

CASING SPACER DETAIL

DWG #

4–33

S:BCGEN/DETAILS/4–33 CASING SPACER.DWG